HECHT®
made for garden

540 / 4041 / 4042

ORIGINAL INSTRUCTIONS FOR USE LAWN MOVER EN

ORIGINAL BETRIEBSANLEITUNG RASENMÄHER DE

PŮVODNÍ NÁVOD K POUŽITÍ SEKAČKY NA TRÁVU CS

PÔVODNÝ NÁVOD NA POUŽITIE KOSAČKY NA TRÁVU SK

ORYGINALNA INSTRUKCJA UŻYTKOWANIA KOSIARKI DO TRAWY PL

EREDETI HASZNÁLATI ÚTMUTATÓ MOTOROS FŰNYÍRÓGÉP HU

EN
Congratulations on your purchase of the product brand HECHT. Before the first operation, please read the owner's manual carefully!

DE
Wir gratulieren Ihnen zum Kauf eines HECHT Produktes. Bitte lesen Sie die Bedienungsanleitung vor der ersten Verwendung sorgfältig durch!

CS
Gratulujeme Vám k nákupu výrobku značky HECHT. Před prvním uvedením do provozu si prosím pozorně přečtěte tento návod k obsluze!

SK
Gratulujeme Vám k nákupu výrobku značky HECHT. Pred prvým uvedením do prevádzky si prosím pozorne prečítajte návod na obsluhu!

PL
Gratulujemy zakupu produktu marki HECHT. Przed pierwszym użyciem należy dokładnie przeczytać instrukcję obsługi!

HU
Köszönjük Önnek, hogy megvásárolta a HECHT márkájú terméket! A készülék első üzembe helyezése előtt figyelmesen olvassa el ezt a használati útmutatót!

EN This manual contains important information about safety, installation, operation, maintenance, storage, and troubleshooting. Keep this manual in a safe place to be able to find information in the future or for other users. Given the constant technological development and adaptation to the latest exacting standards of the EU technical and design changes may be carried out without prior notice. Photographs are for illustrative purposes only, and may not exactly match the product itself. It is not possible to exercise any legal claims associated with this operator's manual. In case of doubt, contact the importer or retailer.

DE Dieses Handbuch enthält wichtige Hinweise zur Sicherheit, zum Aufbau, zur Bedienung, zur Wartung, zur Lagerung und zur Fehlersuche bei Problemen. Bewahren Sie diese Anleitung an einem sicheren Ort auf und stellen sie Sicher, dass diese Informationen auch für andere Nutzer immer verfügbar sind. Angesichts der ständigen technologischen Weiterentwicklungen und Anpassungen an die neuesten EU Standards können technische und optische Änderungen ohne vorherige Ankündigung durchgeführt werden. Die Bilder in diesem Handbuch dienen nur zur Veranschaulichung und können vom gelieferten Produkt abweichen. Es können keine Rechtsansprüche im Bezug auf die Betriebsanleitung geltend gemacht werden. Kontaktieren Sie Ihren Händler bei Unklarheiten, Fragen oder im Zweifelsfall.

CS Tento návod obsahuje důležité informace o bezpečnosti, montáži, provozu, údržbě, uskladnění a řešení případných problémů, proto jej dobře uschovejte pro možnost vyhledání informací v budoucnu a pro další uživatele. Vzhledem k stálému vývoji a přizpůsobování nejnovějším náročným normám EU mohou být na výrobcích prováděny technické a optické změny bez předchozího upozornění. Fotografie použité v manuálu jsou pouze ilustrační a nemusí se přesně shodovat s dodaným výrobkem. Nelze uplatňovat jakékoli právní nároky související s tímto návodem k obsluze. V případě nejasností kontaktujte dovozce nebo prodejce.

SK Tento návod obsahuje dôležité informácie o bezpečnosti, montáži, prevádzke, údržbe, uskladnení a riešení prípadných problémov, preto ho dobre uschovajte pre možnosť vyhľadania informácií v budúcnosti a pre ďalších užívateľov. Vzhľadom k stálemu technickému vývoju a prispôsobovaniu najnovším náročným normám EÚ môžu byť robené technické a optické zmeny bez predchádzajúceho upozornenia. Fotografie použité v manuále sú len ilustračné a nemusia sa presne zhodovať s dodaným výrobkom. Nie je možné uplatňovať akékoľvek právne nároky súvisiace s týmto návodom k obsluhe. V prípade nejasností kontaktujte dovozcu alebo predajcu.

PL Przedkładana instrukcja zawiera ważne informacje dotyczące bezpieczeństwa, montażu, eksploatacji, konserwacji, przechowywania oraz usuwania ewentualnych usterek. W związku z tym instrukcję należy odpowiednio przechować w celu umożliwienia wyszukania informacji w przyszłości oraz dla jej stosowania przez dalszych użytkowników. Ze względu na ciągły rozwój oraz proces dostosowywania do najnowszych, wymagających norm Unii Europejskiej, w wyrobach mogą być wprowadzone zmiany techniczne i graficzne bez wcześniejszego zawiadamiania. Fotografie zastosowane w instrukcji mają jedynie charakter obrazowy i nie muszą dokładnie zgadzać się z dostarczoną maszyna. Wykluczone są jakiekolwiek roszczenia prawne związane z przedkładaną instrukcją obsługi. W przypadku wątpliwości należy kontaktować się z importerem lub ze sprzedawcą.

HU A jelen használati útmutató fontos biztonsági, szerelési, üzemeltetési, karbantartási, tárolási és hibaelhárítási információkat tartalmaz. Az útmutatót őrizze meg, továbbá azt a berendezés egyéb felhasználóinak is adja át. A folyamatos modernizálás, a technológia fejlesztések, valamint az EK előírásainak való megfelelés miatt a termékek műszaki tulajdonságait és kivitelét előzetes bejelentés nélkül is megváltoztathatjuk. Az útmutatóban használt képek csak tájékoztató jellegűek, azok eltérhetnek a ténylegesen megvásárolt terméktől. A használati útmutatóval kapcsolatban minden jogi igényt elutasítunk. Bizonytalanság esetén vegye fel a kapcsolatot a gép importőrével vagy eladójával.

HECHT®
made for garden

ENGLISH

ILLUSTRATED GUIDE 4
SPARE PARTS 10
SAFETY SYMBOLS 11
SPECIFICATIONS 16
MANUAL FOR USE 19
RECOMMENDED ACCESSORIES 196
EC DECLARATION OF CONFORMITY 197
CONFIRMATION OF FAMILIARITY WITH THE OPERATION OF THE DEVICE 199

DEUTSCH

ILLUSTRIERTER LEITFADEN 4
ERSATZTEILE 10
SICHERHEITSSYMBOLE 11
TECHNISCHE DATEN 16
ORIGINALBETRIEBSANLEITUNG 47
EMPFOHLENES ZUBEHÖR 196
EG-KONFORMITÄTSERKLÄRUNG 197
ANERKENNUNG DER NUTZUNGS- UND GARANTIEBEDINGUNGEN 199

ČESKY

OBRAZOVÁ PŘÍLOHA 4
NÁHRADNÍ DÍLY 10
BEZPEČNOSTNÍ SYMBOLY 11
SPECIFIKACE 16
NÁVOD K POUŽITÍ 78
DOPORUČENÉ PŘÍSLUŠENSTVÍ 196
ES PROHLÁŠENÍ O SHODĚ 197
POTVRZENÍ O SEZNÁMENÍ SE S OBSLUHOU ZAŘÍZENÍ 199

SLOVENSKY

OBRAZOVÁ PRÍLOHA 4
NÁHRADNÉ DIELY 10
BEZPEČNOSTNÉ SYMBOLY 11
ŠPECIFIKÁCIA 16
NÁVOD NA POUŽITIE 106
DOPORUČENÉ PRÍSLUŠENSTVO 196
ES VYHLÁSENIE O ZHODE 197
POTVRDENIE O ZOZNÁMENÍ SA S OBSLUHOU ZARIADENIA 199

POLSKI

ZAŁĄCZNIK ZDJĘCIE 4
CZĘŚCI ZAMIENNE 10
SYMBOLE BEZPIECZEŃSTWA 11
DANE TECHNICZNE 16
INSTRUKCJE OBSŁUGI 135
ZALECANE WYPOSAŻENIE 196
DEKLARACJA ZGODNOŚCI WE 197
POTWIERDZENIE ZAPOZNANIA SIĘ Z EKSPLOATACJĄ URZĄDZENIA 199

MAGYAR

ÁBRÁS ÚTMUTATÓ 4
PÓTALKATRÉSZEK 10
JELEK A GÉPEN 11
SPECIFIKÁCIÓ 16
HASZNÁLATI ÚTMUTATÓ 166
AJÁNLOTT TARTOZÉKOK 196
EK MEGFELELŐSÉGI NYILATKOZAT 197
A GÉP ÁTVÉTELÉNEK ÉS BEMUTATÁSÁNAK AZ IGAZOLÁSA 199

ILLUSTRATED GUIDE / ILLUSTRIERTER LEITFADEN / OBRAZOVÁ PŘÍLOHA / OBRAZOVÁ PRÍLOHA / ZAŁĄCZNIK ZDJĘCIE / ÁBRÁS ÚTMUTATÓ

	EN SK	DE PL	CS HU
A.	Handle	Führungsgriff	Rukojeť
	Rukoväť	Rękojeść	Fogantyú
B.	Stop control handle	Sicherheitshebel für Motorbremse	Madlo ovládání brzdy
	Madlo ovládania brzdy	Dźwignia hamulca	Fékvezérlő kar
C.	The upper part of the handle	Oberteil Führungsholm	Vrchní díl rukojeti
	Vrchný diel rukoväte	Górna część rękojeści	Fogantyú felső része
D.	Fastening screws for handle	Befestigungsschrauben für den Griff	Šroub rukojeti
	Skrutka rukoväte	Wkręt zabezpieczający rękojeści	Fogantyú rögzítő csavar
E.	Cable clamp	Kabelklemme	Svorka kabelu
	Svorka kábla	Zacisk kabla	Kábelbilincs

Hecht®
made for garden

	EN SK	DE PL	CS HU
F.	The lower part of the handle	Unterteil Führungsholm	Spodní díl rukojeti
	Spodný diel rukoväte	Dolna część rękojeści	Fogantyú alsó része
G.	Rear cover	Heckklappe	Zadní kryt
	Zadný kryt	Tylna osłona (deflektor)	Hátsó burkolat
H.	Grass sack	Grasfangkorb	Sběrný koš
	Zberný vak	Kosz zbierający	Fűgyűjtő kosár
I.	Oil filler hole / dipstick	Öleinfüllöffnung / Ölpeilstab	Nalévací otvor oleje / měrka
	Nalievací otvor oleja / mierka	Zakrętka otworu wlewu oleju/miarka	Olaj betöltő nyílás / mérőléc
J.	Wheel	Rad	Kolo
	Koliesko	Koło	Kerék
K.	Muffler with guard	Schalldämpfer mit Schutzgitter	Tlumič výfuku s mřížkou
	Tlmič výfuku s mriežkou	Tłumik wydechowy z kratą	Kipufogó
L.	Spark plug	Zündkerze	Zapalovací svíčka
	Zapaľovacia sviečka	Świeca zapłonowa	Gyújtógyertya
M.	Air filter	Luftfilter	Vzduchový filtr
	Vzduchový filter	Filtr powietrza	Levegőszűrő
N.	Engine cover	Motorgehäuse	Kryt motoru
	Kryt motora	Osłona silnika	Motor burkolat
O.	Fuel tank cap	Tankdeckel	Víčko palivové nádrže
	Viečko palivovej nádrže	Zakrętka zbiornika paliwa	Tanksapka
P.	Starter handle	Seilzugstarter	Madlo startéru
	Madlo štartéra	Uchwyt rozrusznika	Indítózsinór
Q.	Throttle choke lever	Chokehebel	Páka sytiče
	Páka sýtiča	Dźwignia ssania	Szívató

2
hecht
made for garden

3
hecht
made for garden

4

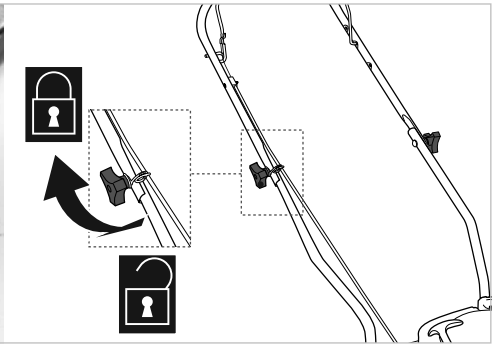

5

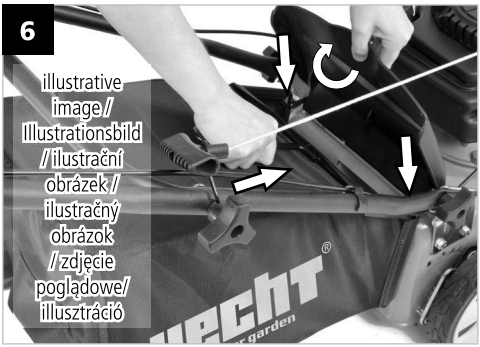
6
illustrative image / Illustrationsbild / ilustrační obrázek / ilustračný obrázok / zdjęcie poglądowe/ illusztráció

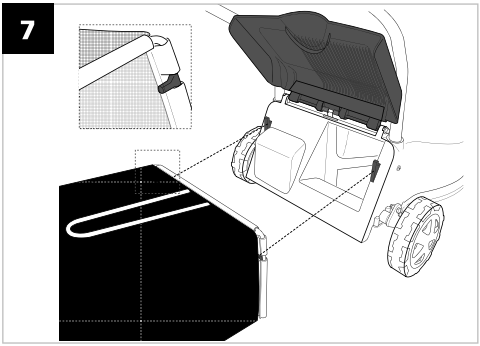
7

8

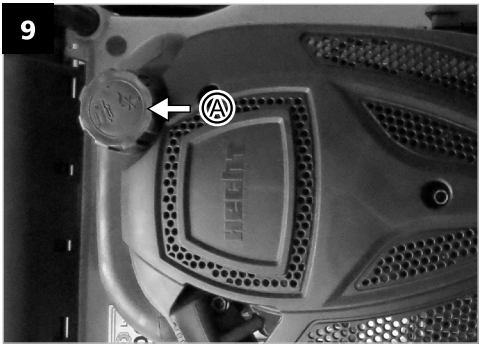
9
A

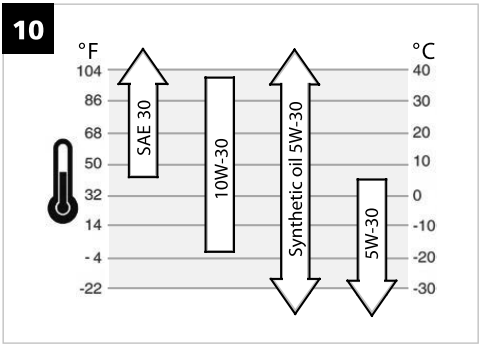
10
°F
°C
104
86
68
50
32
14
- 4
-22
40
30
20
10
0
-10
-20
-30
SAE 30
10W-30
Synthetic oil 5W-30
5W-30

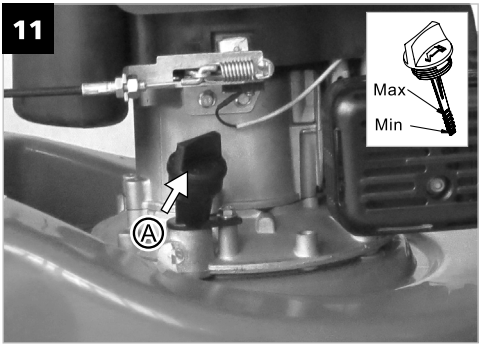
11
Max
Min
A

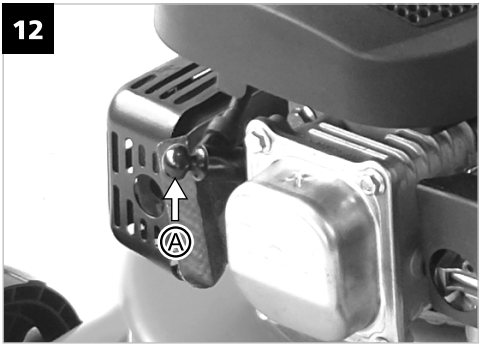
12
A

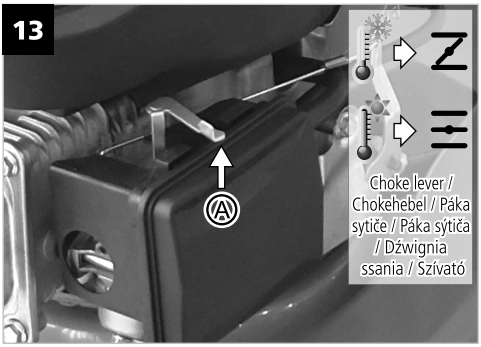
13
A
Choke lever / Chokehebel / Páka sytiče / Páka sýtiča / Dźwignia ssania / Szívató

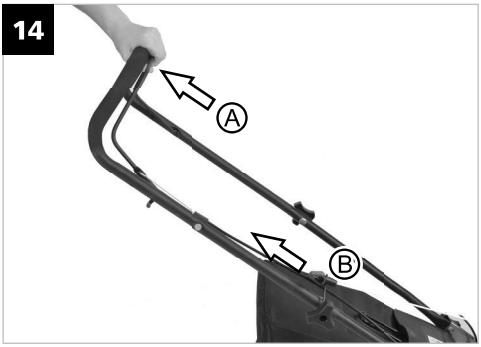
14
A
B

15

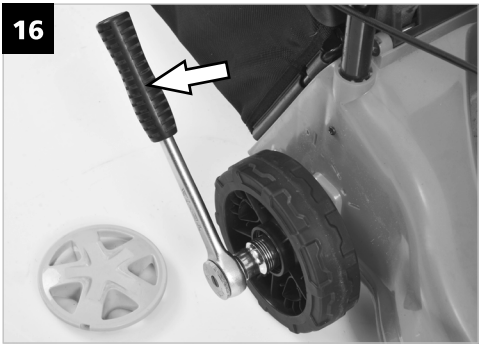
16

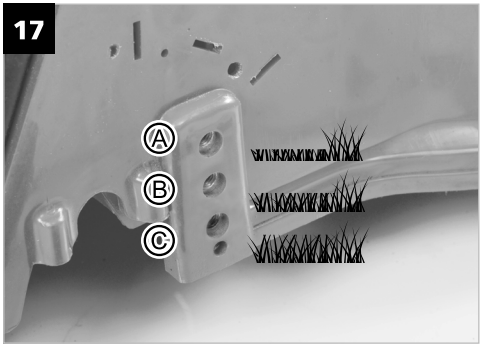

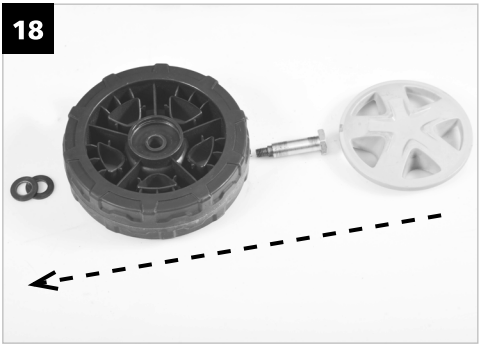

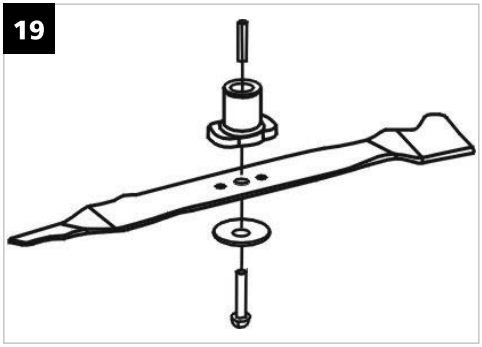

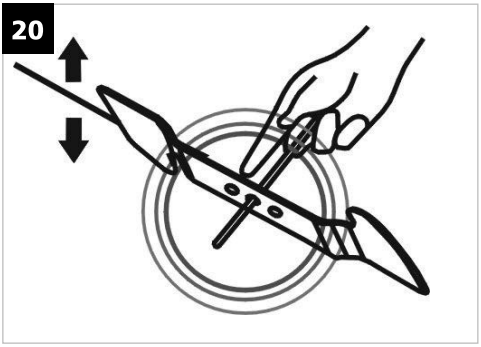

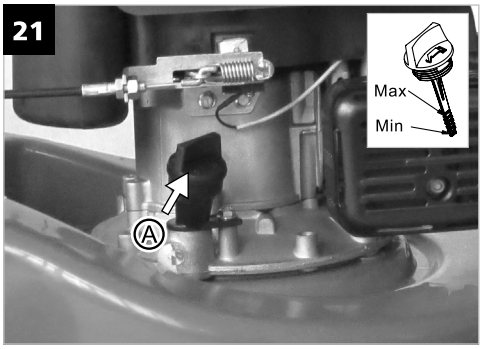

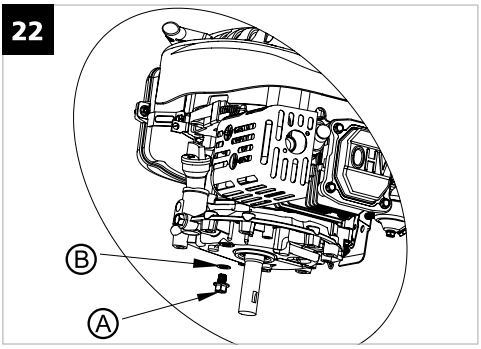

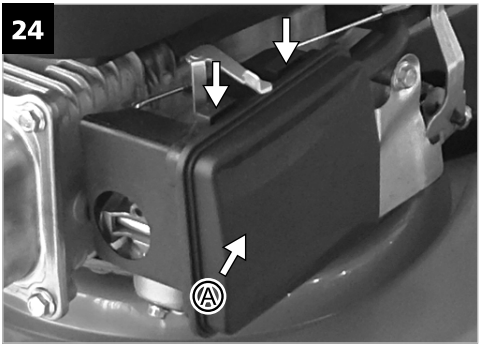

hecht®
made for garden

25

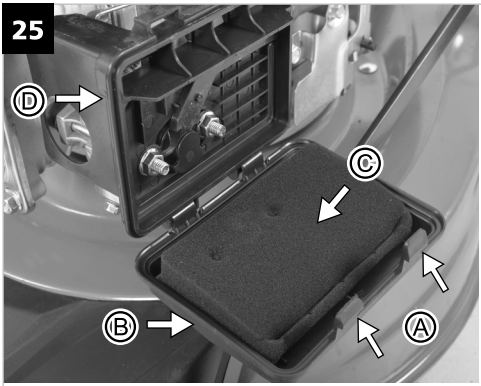

Foam element filter / Schaumfiltereinsatz / Pěnový vzduchový filtr / Penový vzduchový filter / Filtr pianowy / Habszivacs szűrőbetét

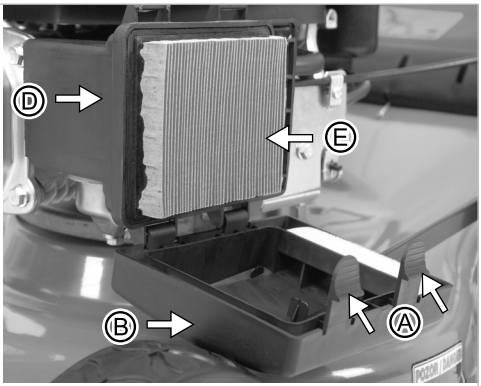

Pleated air filter / Gefaltetes Luftfilter / Skládaný vzduchový filtr / Skladaný vzduchový filter / Harmonijkowy filtr powietrza / Összerakott levegszűrő

A.	Latch tabs / Laschen / Západky / Západky / Zatrzaski / Reteszelő fülek
B.	Air filter cover / Luftfilterdeckel / Kryt vzduchového filtru / Kryt vzduchového filtra / Pokrywa filtra / Légszűrő fedelét
C.	Foam element / Schaumfiltereinsatz / Pěnový vzduchový filtr / Penový vzduchový filter / Filtr pianowy / Habszivacs szűrőbetét
D.	Air filter base / Luftfiltergehäuse / Držák vzduchového filtru / Držiak vzduchového filtra / Obudowa filtra / Levegőszűrőház
E.	Pleated air filter / Gefaltetes Luftfilter / Skládaný vzduchový filtr / Skladaný vzduchový filter / Harmonijkowy filtr powietrza / Összerakott levegszűrő

26

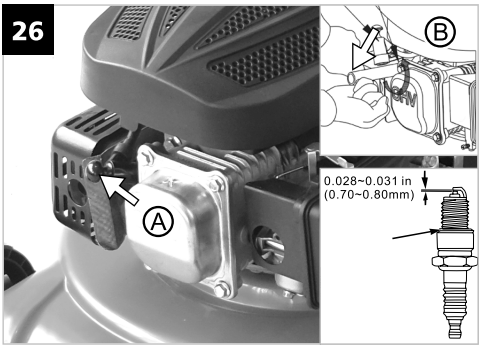

27

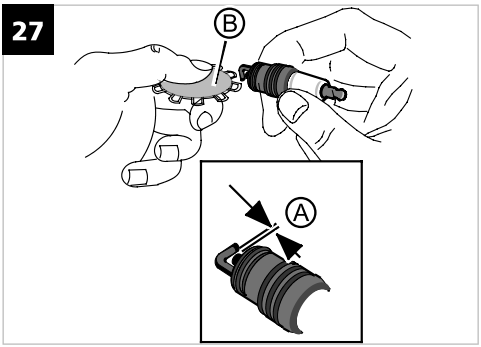

28

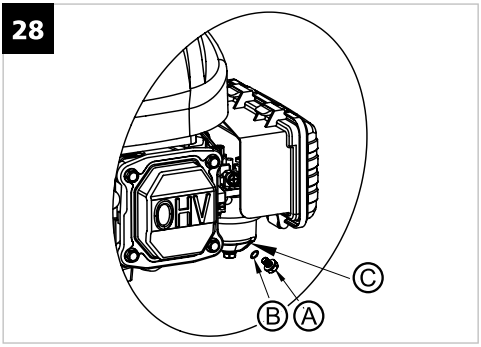

29

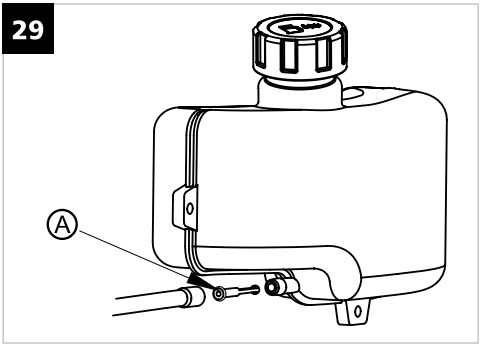

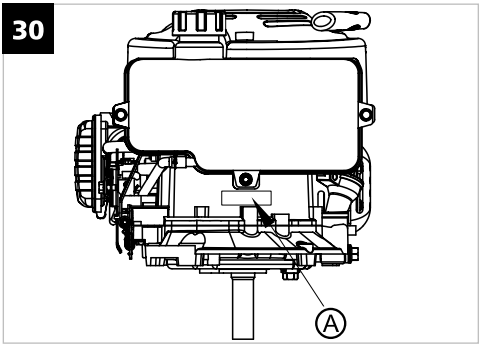

SPARE PARTS / ERSATZTEILE / NÁHRADNÍ DÍLY / NÁHRADNÉ DIELY / CZĘŚCI ZAMIENNE / PÓTALKATRÉSZEK

EN:
Extract from the spare parts list.
Part numbers are subject to change without notice.
Complete and actual spare parts list can be found on
www.hecht.cz

DE:
Auszug aus der Ersatzteilliste.
Die Teilenummern können ohne Ankündigung geändert werden.
Die komplette und aktuelle Ersatzteilliste finden Sie unter
www.hecht-garten.de

CS:
Výtah ze seznamu náhradních dílů.
Čísla dílů se mohou měnit bez předchozího oznámení. Kompletní a aktuální seznam náhradních dílů najdete na
www.hecht.cz

SK:
Výťah zo zoznamu náhradných dielov.
Čísla dielov sa môžu meniť bez predošlého oznámenia. Kompletný a aktuálny zoznam náhradných dielov nájdete na
www.hecht.sk

PL:
Wyciąg z listy części zamiennych.
Numery części mogą być zmienione bez uprzedniego powiadomienia.
Kompletna i aktualna lista części zamiennych znajduje się na stronie
www.hechtpolska.pl

HU:
Kivonat a pótalkatrész jegyzékből. A tételszámokat előzetes figyelmeztetés nélkül is megváltoztathatjuk. Az aktuális és teljes alkatrészjegyzéketa**www.hecht.hu** honlapon találja meg.

EN SK	DE PL	CS HU	Part number / Ersatzteil-Nummer / Číslo dílu / Číslo dielu / Numer części / Alkatrészszám
HECHT 540 / 4041 / 4042			
Cutting blade	Schneidmesser	Žací nůž	**nuz 540 / 4041 2017**
Kosiaci nôž	Nóż do cięcia	Vágókés	
Air filter	Luftfilter	Vzduchový filtr	**filtr 540 / 4041 2017 ***
Vzduchový filter	Filtr powietrza	Légszűrő	
Spark plug	Zündkerze	Zapalovací svíčka	**svicka 540 / 4041 2017 ***
Zapaľovacia sviečka	Świeca zapłonowa	Gyújtógyertya	

* Please quote your engine type and engine serial number when ordering engine spare parts.
* Bei der Bestellung von Ersatzteilen für den Motor geben Sie für die Bestellung bitte auch den Typ und die Seriennummer des Motors an. Ersatzteile können direkt über den Werkstattservice Hecht Deutschland bestellt werden. Mailadresse: werkstatt@hecht-garten.de
* Při objednávání náhradních dílů na motor prosíme uvádějte do objednávky také typ a výrobní číslo motoru.
* Pri objednávaní náhradných dielov na motor prosíme uvádzajte do objednávky tiež typ a výrobné číslo motora.
* Podczas zamawiania części zamiennych do silnika należy podać również typ i numer seryjny silnika.
* Motor pótalkatrészek rendelése esetén a rendelésben tüntesse fel a motor típusát és gyártási számát is.

hecht®
made for garden

SAFETY SYMBOLS / SICHERHEITSSYMBOLE / BEZPEČNOSTNÍ SYMBOLY / BEZPEČNOSTNÉ SYMBOLY / SYMBOLE BEZPIECZEŃSTWA / JELEK A GÉPEN

	EN SK	DE PL	CS HU
	Your machine must be used with care. Therefore, stickers have been placed on the machine, to remind you pictorially of main precautions to take during use. Their meaning is explained below.	Bitte seien Sie bei der Benutzung der Maschine vorsichtig. Aus diesem Grund haben wir am Gerät Symbole angebracht, die Sie auf die wichtigsten Vorsichtsmaßnahmen hinweisen. Die Bedeutung der Symbole ist unten erklärt.	Váš stroj musí být provozován s nejvyšší opatrností. Z těchto důvodů je stroj opatřen samolepkami tak, aby upozornily obsluhu na druh nebezpečí. Jejich význam je vysvětlen níže.
	Váš stroj musí byť prevádzkovaný s najvyššou opatrnosťou. Z týchto dôvodov je stroj opatrený samolepkami tak, aby upozornili obsluhu na druh nebezpečenstva. Ich význam je vysvetlený nižšie.	Używaj swojej maszyny zachowując odpowiednie środki ostrożności. Na urządzeniu zostały umieszczone naklejki ostrzegawcze i informacyjne, by przypominać ci o koniecznych w czasie użytkowania urządzenia środkach ostrożności. Ich znaczenie zostało wyjaśnione poniżej.	A gépet fokozott figyelemmel kell üzemeltetni. A gépen címkék figyelmeztetik a felhasználót a lehetséges veszélyekre. A címkék jelentését lent találja meg.
	These stickers are considered as a part of the machine and shall not under any circumstances be taken. WARNING: Keep the safety signs clear and visible on the equipment. Replace the safety signs if they are missing or illegible.	Diese Aufkleber sind als wesentlicher Bestandteil der Maschine anzusehen und dürfen nicht entfernt werden. Warnung: Die Sicherheitsschilder an der Maschine müssen sauber und gut sichtbar sein. Ersetzen Sie die Sicherheitssymbole, wenn sie nicht mehr gut lesbar oder beschädigt sind.	Samolepky jsou součástí stroje a nesmějí být za žádných okolností snímány. UPOZORNĚNÍ: Udržujte bezpečnostní štítky na stroji čisté a viditelné. Vyměňte bezpečnostní štítky, pokud chybí nebo jsou nečitelné.
	Samolepky sú súčasťou stroja a nesmú byť za žiadnych okolností zosnímané. UPOZORNENIE: Udržujte bezpečnostné štítky na stroji čisté a viditeľné. Vymeňte bezpečnostné štítky, ak chýbajú alebo sú nečitateľné.	Naklejki są częścią maszyny i nie można ich w żadnym wypadku odklejać. OSTRZEŻENIE: Utrzymuj wszystkie etykiety bezpieczeństwa znajdujące się na urządzeniu czyste i widoczne. Należy wymień etykiety bezpieczeństwa, gdy ich brakuje lub są nieczytelne.	A címkék a gép elválaszthatatlan részei, azokat eltávolítani tilos. FIGYELMEZTETÉS! A biztonsági címkéket tartsa tiszta és olvasható állapotban. Amennyiben a címke megsérült vagy hiányzik, akkor cserélje ki a címkét.

	EN SK	DE PL	CS HU
	Proper interpretation of these symbols will allow you to operate the product better and safer. Please study them and learn their meaning.	Ein gutes Verständnis dieser Symbole erlaubt es Ihnen das Produkt besser und sicherer einzusetzen. Bitte schauen Sie sich diese an und machen Sie sich mit ihrer Bedeutung vertraut.	Správná interpretace těchto symbolů Vám umožní pracovat se strojem lépe a bezpečněji. Prostudujte si je prosím a naučte se jejich význam.
	Správna interpretácia týchto symbolov Vám umožní pracovať so strojom lepšie a bezpečnejšie. Preštudujte si ich prosím a naučte sa ich význam.	Poprawne zrozumienie tych symboli pozwoli lepiej i bezpieczniej obsługiwać urządzenie. Należy się z nimi zapoznać i zapamiętać ich znaczenie.	A címkék megfelelő értelmezése segítséget nyújt a gép biztonságos és szabályszerű használatához. Figyelmesen olvassa el a címkék magyarázatát!
	The following warning symbols are to remind you of the safety precautions you should take when operating the machine.	Die Symbole vermitteln wichtige Informationen über das Produkt oder Hinweise zum Gebrauch. Es sind besondere Sicherheitsmaßnahmen beim Umgang mit dem Gerät erforderlich!	Následující varovné symboly připomínají preventivní bezpečnostní zásady, které je nutno při provozu stroje dodržovat.
	Nasledujúce varovné symboly pripomínajú preventívne bezpečnostné zásady, ktoré je nutné pri prevádzke stroja dodržovať.	Podane poniżej symbole ostrzegawcze przypominają o prewencyjnych zasadach bezpieczeństwa, które muszą być przestrzegane podczas pracy maszyny.	A következő figyelmeztető jelek olyan biztonsági előírásokra hívják fel a figyelmét, amelyeket a gép használata során be kell tartani.
	Read the instruction manual.	Lesen Sie die Betriebsanleitung	Čtěte návod na použití.
	Čítajte návod na obsluhu.	Proszę przeczytać instrukcję obsługi.	Olvassa el a használati útmutatót!
	Risk of injury ejected parts.	Verletzungsgefahr durch fortschleudernde Teile.	Nebezpečí poranění vymrštěnými částmi.
	Hrozí nebezpečenstvo poranenia odletujúcimi časťami.	Niebezpieczeństwo urazu odrzuconymi częściami.	Repülő anyagok okozta veszély.
	Keep other people and domestic animals at a safe distance.	Halten Sie andere Personen und Haustieren in einem sicheren Abstand.	Udržujte osoby a domácí zvířata v bezpečné vzdálenosti.
	Udržujte osoby a domáce zvieratá v bezpečnej vzdialenosti.	Osoby i zwierzęta domowe muszą przebywać w bezpiecznej odległości.	A gyerekeket és a háziállatokat tartsa biztonságos távolságban.
	Warning: Risk of hand and feet injury.	Achtung: Gefahr von Händen und Füßen Verletzungen.	Pozor, nebezpečí poranění rukou a nohou.
	Upozornenie: Nebezpečenstvo poranenia rúk a nôh.	Uwaga, zagrożenie poranienia rąk i nóg.	Figyelem! Kéz- és lábsérülés veszélye!

HECHT®
made for garden

	EN SK	DE PL	CS HU
	Risk of injury by rotating parts.	Verletzungsgefahr durch bewegliche Teile.	Riziko zranění rotujícími díly.
	Riziko zranenia rotujúcimi dielmi.	Nie zbliżać nóg ani rąk albo ubranie do obracających się części.	Forgó alkatrészek által okozott sérülések veszélye.
	Attention toxic fumes!	Achtung! Giftige Dämpfe!	Pozor toxické výpary!
	Pozor toxické výpary!	Uwaga na toksyczne opary!	Figyelem! Toxikus gőzök!
	Warning! Do not use the appliance in closed or poorly ventilated environments. Risk of breathing in toxic gases!	Warnung! Verwenden Sie nicht das Gerät in geschlossenen oder schlecht belüfteten Räumen. Risiko des Einatmens giftiger Gase!	Pozor! Nepoužívejte stroj v uzavřených nebo špatně větraných prostorách!! Nebezpečí otravy.
	Pozor! Nepoužívajte stroj v uzavretých priestoroch!! Nebezpečenstvo otravy!	Uwaga! Nie należy używać urządzenia w miejscach zamkniętych lub mało wentylowanych! Grozi ryzyko zatrucia.	Figyelem! A gépet zárt, vagy rosszul szellőztetett helyiségben ne használja. Fulladás veszélye!
	Petrol is a fire hazard and can explode. Smoking and open fire are prohibited.	Benzin ist feuergefährlich und kann explodieren. Rauchen und offenes Feuer sind verboten.	Benzín je hořlavina a může explodovat. Kouření a používání otevřeného ohně je zakázáno.
	Benzín je horľavina a môže explodovať. Fajčenie a používanie otvoreného ohňa je zakázané.	Benzyna jest łatwopalna i może eksplodować. Palenie i używanie otwartego ognia jest zabronione.	A benzin gyúlékony és robbanékony anyag. Dohányzás és nyílt láng használata tilos!
	Risk of explosion! Do not top up with fuel with engine running.	Explosionsgefahr! Kein Nachfüllen mit Kraftstoff mit laufendem Motor.	Nebezpečí výbuchu! Pohonné hmoty je zakázáno doplňovat pokud je motor v chodu.
	Nebezpečenstvo výbuchu! Pohonné hmoty sa nesmú doplňovať pri bežiacom motore!	Niebezpieczeństwo wybuchu! Nie wolno uzupełniać paliwa, gdy silnik jest uruchomiony.	Ez baleset- és robbanásveszélyes! Működő motor mellett az üzemanyagot betölteni tilos!
	Use eyes and ears protection.	Bei der Arbeit mit dem Gerät eine Schutzbrille tragen und Gehörschutz tragen.	Používejte ochranu očí a sluchu.
	Používajte ochranu očí a sluchu.	Używać ochronę oczu i słuchu.	Viseljen védőszemüveget és fülvédőt.
	Disconnect the spark plug before performing any service on the machine.	Bevor die Reparatur, den Motor abstellen und trennen Sie wecken Stecker.	Před prací na stroji vypněte motor a odpojte kabel svíčky!
	Pred prácou na stroji vypnite motor a odpojte kábel sviečky!	Przed rozpoczęciem pracy przy urządzeniu, wyłączyć silnik i odłączyć przewód świecy zapłonowej!	A gépen való munka megkezdése előtt a motort állítsa le és a gyertyapipát húzza le.

	EN SK	DE PL	CS HU
	Risk of burns. Keep safety distance from hot parts of the machine.	Achtung heiße Flächen, Verbrennungs-gefahr!	Riziko popálenin. Udržujte bezpečnou vzdálenost od horkých částí stroje.
	Riziko popálenín. Udržujte bezpečnú vzdialenosť od horúcich častí stroja.	Ryzyko poparzenia. Zachowuj bezpieczną odległość od gorących części urządzenia.	Égési sérülés veszélye! Tartózkodjon biztonságos távolságra a gép forró részeitől.
	The fuel is extremely inflammable, before refilling please leave the engine cooling down for aprox. 15 minutes.	Kraftstoff ist extrem feuergefährlich, lassen Sie vor dem Kraftstoffauffüllen den Motor etwa 15 Minuten abkühlen.	Palivo je extrémně hořlavé, před doplněním paliva nechte motor asi 15 minut vychladnout.
	Palivo je extrémne horľavé, pred doplnením paliva nechajte motor asi 15 minút vychladnúť.	Paliwo jest ekstremalnie łatwopalne, przed uzupełnieniem paliwa pozostawić silnik przez około 15 minut wystygnąć!	Az üzemanyag rendkívül gyúlékony, a betöltés előtt a motort hagyja 15 percig hűlni.
	LWA Data Lwa noise level in dB.	Schallleistungspegel (LWA)	LWA Údaj hladiny akustického tlaku Lwa v dB.
	Údaj o hladine akustického výkonu Lwa v dB.	LWA dane dotyczące poziomu ciśnienia akustycznego Lwa w dB.	LWA akusztikus nyomás Lwa dB-ben.
	Engine displacement	Hubraum	Objem motoru
	Objem motora	Pojemność	Motor lökettérfogata
	Max. engine power	Max. Motorleistung	Max. výkon motoru
	Max. výkon motora	Max. moc silnika	Motor maximális teljesítménye
	Weight	Gewicht	Hmotnost
	Hmotnosť	Masa	Tömeg
	Working width	Arbeitsbreite	Šířka záběru
	Šírka záberu	Szerokość zasięgu	Nyírási szélesség
	Max. blade speed	Max. Geschwindigkeit des Werkzeug	Max. otáčky nože
	Max. otáčky noža	Max. prędkość noża	Kés max. fordulatszám
	Product conforms to relevant EU standards.	Das Produkt entspricht den einschlägigen EU-Normen	Výrobek odpovídá příslušným standardům EU.
	Výrobok zodpovedá príslušným štandardom EU.	Produkt jest zgodny z normami UE.	A termék megfelel az EK vonatkozó szabványainak
	Keep feet and hands away!	Halten Sie Ihre Füße und Hände in Sicherheitsabstand.	Ruce a nohy držte mimo dosah sekačky.
	Nohy a ruky držte mimo dosah rotujúcich častí.	Ręce i nogi trzymać poza zasięgiem kosiarki.	A kezeit és lábait tartsa kellően távol

HECHT®
made for garden

	EN SK	DE PL	CS HU
	Oil	Öl	Olej
	Olej	Olej	Olaj
	Release the brake control handle to stop the engine.	Durch Loslassen des Bremsbügels halten Sie den Motor an.	Uvolněním držadla ovládání brzdy zastavíte motor.
	Uvoľnením držadla ovládania brzdy zastavíte motor.	Poprzez zwolnienie rękojeści sterowania hamulca dojdzie do zatrzymania silnika.	Endedje el a fékvezérlő kart a gép megállításához
	Recoil starter symbol	Manueller Start	Ruční startování
	Ručné štartovanie	Start manualny	Kézi indítás
	Choke	Choke	Ovládání sytiče
	Ovládanie sýtiča	Ssanie	Szívató
	Fuel	Kraftstoff	Palivo
	Palivo	Paliwo	Üzemanyag

SPECIFICATIONS / TECHNISCHE DATEN / SPECIFIKACE / ŠPECIFIKÁCIA / DANE TECHNICZNE / SPECIFIKÁCIÓ

EN SK	DE PL	CS HU	
HECHT 540 / 4041 / 4042			
Engine - 4-stroke, single cylinder, OHV	Motor - 4-Takt, Einzylinder, OHV	Motor - 4-takt, jednoválec, OHV	✔
Motor - 4-takt, jednovalec, OHV	Silnik - 4-suwowy, 1-cylindrowy, OHV	Motor - 4-ütemű, 1 hengeres, OHV	
Nominal engine power according to SAE J1940	Nennmotor-leistung nach SAE J1940	Jmenovitý výkon motoru podle SAE J1940	**1,8 kW / 2,5 HP**
Menovitý výkon motora podľa SAE J1940	Moc znamionowa silnika przez SAE J1940	Névleges motorteljesítmény, SAE J1940 alapján	
Max. torque	Max. Drehmoment	Max. točivý moment	**4,7 Nm**
Max. krútiaci moment	Max. moment obrotowy	Max. forgatónyomaték	
Max. operating speed of engine (rpm)	Max. Arbeits-drehzahl des Motors (U/min)	Max. pracovní otáčky motoru (ot./min.)	**2850 / min.**
Max. pracovné otáčky motora (ot./min.)	Max. robocza prędkość silnika (obr./min.)	Max. üzemi fordulatszám (ford./min.)	
Engine displacement	Hubraum	Objem motoru	**99 cm³**
Objem motora	Pojemność	Lökettérfogat	
Bore x stroke	Bohrung x Hub	Vrtání x zdvih	**56*40 mm**
Vŕtanie x zdvih	Wiercenie x skok	Furat x löket	
Forced air cooling system	Zwangsluft-kühlung	Chlazení nuceným oběhem vzduchu	✔
Chladenie núteným obehom vzduchu	Wymuszony obieg powietrza	Kényszerkeringetésű levedő hűtő	
Lubrication system - forced splash	Schmiersystem - gezwungen Spritz	Mazací soustava - nucený rozstřik	✔
Mazacia sústava - nútený rozstrek	Układ smarowania - wymuszony rozprysk	Kenési rendszer - kényszerolajozású	
Spark plug gap	Zündkerze / Elektrodenabstand	Vzdálenost elektrod svíčky	**0,7 - 0,8 mm**
Vzdialenosť elektród sviečky	Odległości między elektrodami świecy	Gyújtógyertya elektróda hézag	
Spark plug torque	Zündkerze Drehmoment	Utahovací moment zapalovací svíčky	**18-20 Nm**
Uťahovací moment zapaľovacej sviečky	Moment dokręcania świecy zapłonowej	Gyújtógyertya nyomaték	

HECHT® made for garden

EN SK	DE PL	CS HU	
Fuel tank capacity	Kraftstofftankinhalt	Kapacita palivové nádrže	**1,2 l**
Kapacita palivovej nádrže	Pojemność zbiornika paliwa	Üzemanyagtartály kapacitása	
Fuel type - unleaded gasoline	Kraftstoffart – Benzin bleifrei	Palivo - bezolovnatý benzín	✔
Palivo - bezolovnatý benzín	Paliwo - benzyna bezołowiowa	Üzemanyag típ. - ólommentes benzin	
Min. octane rating	Mindest Oktanzahl	Min. oktanové číslo	**86**
Min. oktánové číslo	Min. liczba oktanowa	Min. oktánszám	
Oil tank capacity	Öltankkapazität	Kapacita olejové nádrže	**0,4 l**
Kapacita olejovej nádrže	Pojemność oleju	Olajtartály kapacitása	
Lubricating oil	Schmieröl	Mazací olej	**SAE 10W-30**
Mazací olej	Olej smarujący	Motorolaj típusjele	
Recommended oil	Empfohlenes Öl	Doporučený olej	**HECHT 4T**
Odporúčaný olej	Zalecany olej	Ajánlott motorolaj	
Cutting width	Schnittbreite	Záběr sečení	**410 mm**
Záber kosenia	Szerokość robocza	Vágási szélesség	
Grass catcher capacity according to EK 9	Grasfang-kapazität gemäß EK 9	Kapacita sběrného koše dle EK 9	**45 l**
Kapacita zberného koša podľa EK 9	Pojemność kosza zbierającego w zależności EK 9	Fűgyűjtó kosár kapacitása EK 9 alapján	
Range of height adjustment	Bereich der Höhenverstellung	Rozpětí nastavení výšky	**25 - 55**
Rozpätie nastavenia výšky	Rozmiar ustawienia wysokości	Vágási magasság állítás tartománya	
Height adjustment possibilities	Anzahl der Höheneinstellungen	Možnosti nastavení výšky	**3**
Možnosti nastavenia výšky	Stopnie ustawienia wysokości	Vágási magasság állítási fokozatok	
Front / rear wheels	Vorder- / Hinterräder	Přední / zadní kola	**Ø 7" / 7"**
Predné / zadné kolesá	Przednie / tylne koła	Első / hátsó kerekek	
Maximum recommended area for regular mowing	Max. Empfohlene Mähfläche für regelmäßige Mahd	Doporučená maximální plocha pro pravidelné sečení	**700 m²**
Doporučená maximálna plocha pre pravidelné kosenie	Max. zalecana powierzchnia pracy do regularnego koszenia	Rendszeres nyírásra ajánlott max. terület	
Blade screw torque	Anzugsmoment des Messers	Kroutivý moment utažení nože	**37 Nm**
Krútivý moment utiahnutia noža	Moment dokręcania śruba noża	Vágókés forgatónyomatéka	

EN SK	DE PL	CS HU	
Weight	Gewicht	Hmotnost	**23,5 kg**
Hmotnosť	Masa	Tömeg	
Operating conditions	Betriebsbedingungen	Provozní podmínky	**0°C - +32°C**
Prevádzkové podmienky	Warunki użytkowania	Működési hőmérséklet	
Measured noise pressure level at the place of operation	Gemessener Schalldruckpegel am Ort des Benutzers	Naměřená hladina akustického tlaku v místě obsluhy	**LPA = 85 dB (A); K = 3 dB (A)**
Nameraná hladina akustického tlaku v mieste obsluhy	Zmierzony poziom ciśnienia akustycznego na operatora	Mért hangnyomás az üzemeltetés helyén	
Vibrations on the handle	Schwingungen am Handgriff	Vibrace na rukojeti	**7 m/s²; K = 1,5 m/s²**
Vibrácie na rukoväti	Wibracje na uchwycie	Vibráció a markolaton	
Specifications are subject to change without notice.	Die Spezifikationen können ohne Ankündigung geändert werden.	Specifikace se mohou měnit bez předchozího oznámení.	
Špecifikácie sa môžu meniť bez predošlého oznámenia.	Specyfikacje mogą być zmienione bez uprzedniego powiadomienia.	A specifikációt előzetes figyelmeztetés nélkül is megváltoztathatjuk.	

HECHT®
made for garden

MANUAL FOR USE

WARNING! PLEASE READ THE OPERATING INSTRUCTIONS! Read all instructions before operation. Pay special attention to safety instructions.

Pay special attention to the instructions highlighted as follows:

WARNING! A signal word (word label) used to indicate a potentially dangerous situation that can result in death or serious injury, if it is not prevented.

CAUTION! A signal word (word label). In case of non-compliance with the instructions, we warn against a potential danger of minor or moderate injury and/or damage to the machine or property.

Important message.

Note: It provides helpful information.

CONTENT

ILLUSTRATED GUIDE **4**
SPARE PARTS **10**
SAFETY SYMBOLS **11**
SPECIFICATIONS **16**
SAFETY INSTRUCTIONS **20**
GENERAL SAFETY INSTRUCTIONS 21
TRAINING 21
WORK AREA 22
SAFETY INSTRUCTIONS FOR OPERATION OF THE MOWER 22
USING PETROL MACHINES 23
PERSONAL SAFETY 24
PROTECTIVE EQUIPMENT 25
RESIDUAL RISKS 25
PERSONAL PROTECTION AND FIRST AID 25
UNPACKING **26**
ASSEMBLY **27**
BEFORE STARTING **27**
FUEL 28
ENGINE OIL 28
OIL LEVEL CHECK 29
OPERATING INSTRUCTIONS **29**
TO START ENGINE 29
BRAKE HANDLE 30
TO STOP ENGINE 30
GRASS CATCHER 30
HEIGHT ADJUSTMENT INSTRUCTIONS 31
FOR THE BEST RESULTS MOWING 31
MAINTENANCE **32**
MACHINE MAINTENANCE 32
CLEANING 33
LUBRICATION INSTRUCTIONS 33
CUTTING BLADE 34

ENGINE MAINTENANCE 34
MAINTENANCE CHART 35
OIL CHANGE 35
AIR FILTER 36
SPARK PLUG 37
MUFFLER AND SPARK ARRESTER 38
CARBON SEDIMENTS 38
FUEL SYSTEM 38
REMOVAL OF DIRT 38
DRAINING THE FUEL TANK AND CARBURETOR 38
FUEL STRAINER CLEANING 39
CLEAN AIR COOLING SYSTEM 39
ENGINE BRAKE / FLYWHEEL BRAKE 39
ENGINE ADJUSTMENTS 39
STORAGE 40
STORAGE INSTRUCTIONS FOR YOUR ENGINE 40
OFF SEASON STORAGE 41
FUEL STORAGE 41
DEVICE-SPECIFIC STORAGE INSTRUCTIONS 41
TRANSPORTING 42
TROUBLESHOOTING 42
TECHNICAL & CONSUMER INFORMATION 44
SERVICE AND SPARE PARTS 44
DISPOSAL 44
GUARANTEE OF THE PRODUCT 44
GUARANTEE OF THE ENGINE 45
RECOMMENDED ACCESSORIES 196
EC DECLARATION OF CONFORMITY 197
CONFIRMATION OF FAMILIARITY WITH THE OPERATION OF THE DEVICE 199

SAFETY INSTRUCTIONS

⚠ **WARNING! PLEASE READ THE OPERATING INSTRUCTIONS! Read all instructions before operation. Pay special attention to safety instructions.**

FAILURE TO FOLLOW THE INSTRUCTIONS AND FAILURE TO RESPECT SECURITY MEASURES MAY RESULT IN DAMAGE OF THE PRODUCT OR SERIOUS INJURIES OR EVEN FATAL INJURY.

If you notice any damage during transport or unpacking, notify your supplier immediately. **DO NOT PUT INTO OPERATION.**

SPECIFIC TERMS AND CONDITIONS OF USE

This product is exclusively intended for the use:

- in accordance with description and safety instructions specified in this user´s manual.
- to mow the treated lawn of domestic garden.
- this lawn mower is intended for private use i.e. for use in home and gardening environments. Private use of the lawn mower refers an annual operating time generally not exceeding that of 50 working hours, during which time the machine is primarily used to maintain small-scale, residential lawns and home / hobby gardens. The machine

is not intended for use in public facilities, sporting halls, and agricultural/forestry applications.
- As a result of the potential danger to the user, the lawn mower must not be used to trim bushes, hedges and shrubs, to cut or shred climbing plants or lawns on roof gardens or in balcony boxes or to clean footpaths, nor must it be used as a chopper for shredding tree or hedge cuttings. Furthermore, the lawnmower must not be used as a cultivator or to level off uneven areas of ground, e.g. molehills.

Any other use is not as intended. Improver use is not covered by the warranty and the manufacturer will reject any liability.
The use not corresponding to the intended purpose results in warranty termination and the rejection of any responsibility on the part of the manufacturer.
Unauthorized changes exclude the liability of the manufacturer for damages resulting from this.

Do not overload! Use the product only for the powers it was designed for. The product designed for a given purpose performs it better and safer than one that has a similar function. Therefore, always use the correct one for a given purpose.

Please keep in mind that our products are not designed for commercial, trade or industrial use according to their intended purpose. We accept no liability if the product is used in these or comparable conditions.

Keep this manual handy so that you may refer to it later whenever any questions arise. Also note, if you have any questions which cannot be answered herein, contact the dealer from whom you purchased the product.

Always be sure to include this manual when selling, lending, or otherwise transferring the ownership of this product.

GENERAL SAFETY INSTRUCTIONS

When using this product, observe the following safety precautions to avoid the risk of personal injury or property damage. Observe also the special safety instructions in each chapter.

Where it is required, follow the legal guidelines and regulations to prevent possible accidents during operation.

The user is liable for all damages caused to third parties or their property.
Never use the product if it is close to people, especially children or pets.

TRAINING

All operating personnel must be adequately trained in the use, operation and setting and especially familiar with prohibited activities.

- Read the instructions carefully and keep them for future reference in case you are not sure about the proper operation.
- Never allow use by children or people unfamiliar with these instructions. Local regulations may specify an age limit of the operator.

- The product is not intended for use by persons (including children) with reduced physical, sensory or mental capacity or lack of experience and knowledge, unless they are supervised by a person responsible for their safety or unless that person has learned to use the product.

WORK AREA

- Keep work area clean and well lit. Cluttered and dark areas invite accidents.
- Do not operate in explosive atmospheres, such as in the presence of flammable liquids, gases, or dust. Product create sparks which may ignite the dust or fume.
- Check the terrain where you are going to use the machine, and remove any objects that could be caught, tangled, or discarded. (Stones, shards of glass, nails, wires, toys, sticks, etc.). Operate the machine only on a safe surface.
- Never use the machine during rain and storms, especially if there is a risk of lightning strikes.
- Don't use on excessively steep slopes to avoid the risk of tipping the machine.
- Never use the machine on a slippery surface. Keep children and bystanders away while operating the machine. Distractions can cause you to lose control.

SAFETY INSTRUCTIONS FOR OPERATION OF THE MOWER

Know your tool. Read owner's manual carefully. Learn its applications and limitations as well as the specific potential hazards related to this tool. Familiarise yourself with the controls on the machine and how to use them.

CAUTION! This machine can sever hands and feet as well as throw objects. Failure to follow the safety regulations can lead to severe injury.

WARNING! Petrol is highly flammable.

- Before using the machine, always check, that all start inhibits and controls requiring operator presence, are fully functional (eg. safety lever of engine stop).
- Before using the machine do always a visual check - the device for stop the blades works correctly.
- Avoid operating the equipment in moist or even wet grass, where feasible. Mow only dry grass. Too long or wet grass leads to blocking and overload the engine. To avoid stirring up the dust, mow the grass best when it´s is dry, but the soil is still moist. Dust causes the air filter pollution and this causes higher fuel consumption. Due to lack of maintenance the engine can be damaged.
- For safety reasons, the machine may not be used as a drive unit for other work tools or tool kits of any kind.
- On the slopes keep firm footing at all times.
- Walk, never run.
- For wheeled rotary machines, mow across the face of slopes, never up and down.
- Exercise extreme caution when changing direction on slopes.
- Do not mow excessively steep slopes. Danger of injury by overturning machine. Maximum allowed slope is 15°.
- Be careful when using the lawnmower near verges, ditches, or banks. Machine can suddenly turn over if a wheel is over the edge of a cliff or ditch, or if an edge caves in.
- Use extreme caution when reversing or pulling the lawn mower towards you.
- Stop the blade(s) if the lawn mower has to be tilted for transportation when crossing surfaces other than grass, and when transporting the lawn mower to and from the area to be mowed.

- Do not tilt the machine when starting or switching on the motor, except if the machine has to be tilted for starting. In this case, do not tilt it more than absolutely necessary and tilt only the part which is away from the operator.
- Do not use the machine with damaged safety devices or screens or with missing, modified or disabled safety systems. Do not work with machine that is damaged, incomplete, or has been modified without the authorisation of the manufacturer.
- The lawnmower shall not be operated without either the entire grass catcher or self-closing discharge opening guard in place. Keep away from the ejection hole at all times.
- Always keep the grass ejection hole clean and clear. Remove cut material only when the equipment is stopped.
- Do not alter or tamper with any sealed adjustment for the engine speed control. Do not change the engine governor settings or overspeed the engine. Operating the engine at excessive speed can increase the risk of personal injury.
- Disengage all blade and drive clutches before starting the engine.
- Start the engine carefully according to instructions and with feet well away from the blade(s).
- The safety distance produced by the long handle must be maintained at all times.
- Do not leave the equipment unattended in the workplace.
- Stop and switch off the machine, when leaving the operation stand. Wait till all moving parts stop and if it is necessary ensure the machine before moving.
- Stop the engine and disconnect the spark plug wire, make sure that all moving parts have come to a complete stop and, where a key is fitted remove the key:
  - Whenever you leave the lawn mower.
  - Before refueling.
  - Before clearing blockages or unclogging chute.
  - Before checking, cleaning or working on the lawn mower.
  - After striking a foreign object. Inspect the lawnmower for damage and make repairs before restarting and operating the lawn mower.
  - If lawn mower starts to vibrate abnormally (check immediately).
  - Reduce the throttle lever to the "Min" (idle) during engine shut down and, if the engine is provided with a shut-off valve, turn the fuel off at the conclusion of mowing.
- Comply with the national / municipal regulations concerning the times when the mower may be used (if required, contact your local authority).
- Before using, always visually inspect to see that the blades, blade bolts and cutter assembly are not worn or damaged. Replace worn or damaged blades and bolts in sets to preserve balance. Use only original spare parts.
- Keep cutting tools sharp and clean. Properly maintained cutting tools with sharp cutting edges are less likely to bind and are easier to control. Property maintained lawn mower with sharp and unused blades ensure clean cut and it will not get clogged.
- Use only spare parts and components, which the manufacturer delivers and recommends. The use of non-genuine parts can damage the machine and injure the operators.
- Do not attempt to repair the device yourself. Any work not listed in this manual MAY BE PERFORMED ONLY BY AUTHORIZED SERVICE CENTRES.

USING PETROL MACHINES

⚠ **WARNING! During operation the engine produces carbon monoxide. It is a colourless, odourless, poisonous gas. Breathing carbon monoxide can cause nausea, fainting, reproductive disorders and even death.**

- The performance of a petrol engine mounted on a particular device, may not achieve gross output. It is caused by many factors, e.g. the used components (exhaust, charging, cooling, carburettor, air filter, etc.), usage restrictions, operational conditions of use (temperature, humidity, etc.) and the differences between individual engines produced.

⚠ **CAUTION! A running engines generates heat. Parts of the engine and silencer become extremely hot during operation. After touching they may cause serious burns. If it is close to any flammable materials, e.g. leaves, grass, shrubbery etc., it may catch fire.**

- Don't run the engine in an enclosed space, which can cause an accumulation of carbon monoxide.
- Before any adjustments, changing accessories, or storing petrol machines, first shut them down, let them totally cool down and secure against accidental start-up by pulling the spark plug end.
- Unused petrol machines should be stored out of the reach of children. Don't allow the machine be used by people who are not familiar with the operation and this user manual. Petrol machines are dangerous in the hands of unqualified people.
- Don't use a petrol machine where the engine switch doesn't work.
- When working with a petrol machine never use brute force. The machine, which was designed for the job, performs it better and safer, therefore always use the correct machine for a given task.
- Maintain petrol machines properly. Make sure the moving parts are properly adjusted, and that they aren't stuck.
- Make sure that there are no broken parts on the machine or other problems that could adversely affect the operation of the machine. If the machine is damaged, have it repaired before further use. Many accidents are caused by poor maintenance of machines.
- Don't tilt the machine so that it could fall over or leak petrol and oil.

PERSONAL SAFETY

- When working, be vigilant, stay focused on what you're doing and use common sense.
- Don't use the machine if you are tired or under the influence of alcohol, drugs or medication. A moment of inattention at work can result in loss of control above the machine and serious injury.
- When working don't overreach. Always stand firmly and with good balance, then if you get into unexpected situation, you will have better control of the machine.
- Always keep body parts and clothing away from rotating or hot parts of the machine. Don't touch the machine and try to stop it, if any component still rotates.
- Don't operate the machine without having all the security components installed.
- Turn off the engine if you don't work with the machine, if you leave it or you want to make adjustments, maintenance or repair.
- Never run with the machine, always walk.

⚠ **WARNING! The product produces an electromagnetic field of a very weak intensity. This field may interfere with some pacemakers. To reduce the risk of serious or fatal injury, persons with pacemakers should consult the use of the machine with physician and the manufacturer.**

PROTECTIVE EQUIPMENT

- Wear appropriate clothing at work. Don't wear loose clothing or jewellery, tie up your hair. Loose clothes, jewellery or long hair can be caught in moving parts.
- Wear approved eye protection! The operation of machine can result in foreign objects being thrown into your eyes which may result in severe eye damage. Normal glasses are not sufficient for eye protection. For example, corrective glasses or sunglasses do not provide adequate protection because they have not special safety glass and aren't enough closed from the sides.
- Wear adequate noise protection equipment! The impact of noise can cause hearing damage or hearing loss. Take frequent work breaks. Limit the amount of exposure per day.
- Always wear sturdy shoes with nonslip soles. Risk of damaging the legs or risk of slipping on wet or slippery ground. This protects against injuries and ensures a good footing.
- While working, always wear long trousers. Do not operate the machine when barefoot or wearing open shoes.
- Safety equipment such as a dust mask or hard hat used for appropriate conditions will reduce personal injuries, especially when the machining operation creates dust or there is a risk of hitting your head on protruding or low level obstructions.

RESIDUAL RISKS

- Even if the device is used according to instructions, it´s impossible to eliminate all the risks associated with its operation. The following risks may occur arising from device construction:
- Mechanical hazard, caused by cut and throw off.
- Electrical hazard caused by touch with parts under high voltage (direct contact) or with parts, which came under a high voltage due to failure of the device (indirect contact).
- Heat hazard resulting in burning or scalding and other injuries caused by possible contact with high temperature objects or materials including heat sources.
- Noise risk resulting in loss of hearing (deafness) and other physiological disorders (e.g. loss of balance, loss of consciousness).
- Vibration risk (resulting in vascular and neurological harm in the hand-arm system, for example so called "white finger disease").
- Dangers caused by failing in ergonomic principles by construction of the machine, for example dangers caused by unhealthy position of body or excessive overcharge and unnature to the anatomy of the human hand-arm, relate to construction of handle, equilibrium of the machine.
- Dangers caused by unexpected starting, unexpected exceeding of engine revs caused by defect/failure of control system, relate to the defects by the handle and placing of drivers.
- Dangers caused by impossibility to stop the machine in best conditions, relate to solidity of the handle and placing of engine shut down device.
- Dangers caused by defect of machine control system, relate to solidity of the handle, placing of drivers and marking.
- Dangers caused by shooting up of subjects or splashing of liquids.

PERSONAL PROTECTION AND FIRST AID

- Work only in places where it is possible to quickly call an ambulance!

Note: we recommend always having:

- A suitable fire extinguisher (snow, powder, halotron) at your disposal.
- A fully equipped first-aid kit, easily accessible for accompaniment and operator.

- Mobile phone or other device for quickly calling emergency services.
- **Accompaniment familiar with the principles of first aid.**

Accompaniment must keep a safe distance from the workplace while always seeing you!

- **Always follow the principles of first aid in case of any injuries.**
- If there is a **cut**, cover the wound with a clean bandage (fabric) and press down firmly to stop the bleeding.
- If the skin is **burnt**, avoid further exposure to the source of burns first. Cool the injured areas of smaller extend with water of preferably about 4-8 °C. Do not put ointments, creams or dusting powders on the affected area. The best way is to use a wet compress, for example a handkerchief or a towel. Then secure the sterile cover and, if necessary, seek medical attention.
- If **persons with circulatory problems** are often exposed to excessive **vibration**, they may experience injury to blood vessels or their nervous system. The vibrations may cause the following symptoms appear on fingers, hands or wrists: numbness, itching, pain, tingling, changes in skin colour or of the skin itself. If any of these symptoms occur, consult a doctor.
- Do not let **petrol or oil come in contact** with your skin. Keep petrol and oil away from the eyes. If petrol or oil comes in contact with the eyes, wash them immediately with clean water. If irritation is still present, see a doctor immediately.

In case of fire:

- If the motor starts to burn or it the smoke appears from it, turn the product off and move away to safety.
- To extinguish the fire, use suitable fire extinguisher (snow, powder, halotron).
- **DO NOT PANIC.** Panic can cause even more damage.

UNPACKING

- Carefully remove the product from the box.
- Carefully inspect all parts. If any part is damaged or missing, contact your dealer or authorized service center.
- Do not throw away packaging materials until you have not reviewed carefully if they did not remain a part of the product.
- Parts of the packaging (plastic bags, paper clips, etc.) do not leave within reach of children, could be a possible source of danger. Do not let children play with plastic bags, foils or small parts. There is a danger of swallowing or suffocating!
- Disposal must be made in accordance with the regulations in force in the country in which the equipment was installed.
- Make sure that bags and containers of plastic material are left strewn freely in the environment because they pollute it.
- If you have any doubt do not use the machine, but have it checked by an authorized service center.

PACKAGE CONTENTS

1x lawn mower body, 1x upper part of the handle, 1x lower part of the handle, 1x grass bag, 1x metallic frame of grass bag, 2x bolt with wing nut, 1x manual for use

HECHT®
made for garden

Standard accessories are subject to change without notice.

ASSEMBLY

This product requires assembly. The device must be assembled correctly before use.
The complete push bar, the grass catcher and the wheels must be assembled before using the lawnmower. Follow the operating instructions step-by-step and use the pictures provided as a visual guide to easily assemble the machine.

1. Put the metallic frame inside the grass catcher ***(fig. 2)*** - if not already assembled.
2. Fix the bag on the metallic frame ***(fig. 3)***.
3. Screw the lower part of the handle to the chassis of the mower ***(fig. 4)***.
4. Screw the upper part of the handle to the lower part of the handle ***(fig. 4)***. Do not forget to the right side of the grip insert holder of the handle of the starter.
5. Attach the cable using the cable-clamp ***(fig. 5)***.

MOUNTING AND DISMOUNTING THE GRASS CATCHER

1. To fit: Raise the rear cover and hitch the grass catcher on rear of mower ***(fig. 6 + 7)***.
2. To remove: grasp and lift rear cover, remove grass catcher.

STARTER HANDLE

Disconnect the spark plug boot. Press stop control handle. Pull gently the starter handle toward the handle and put it to the rope guide ***(fig. 8)***. Connect the spark plug boot.

BEFORE STARTING

For your safety, and to maximize the service life of your equipment, it is very important to take a few moments to check the engine condition before operating.

Always check the following items before you start the engine:

1. Fuel level.
2. Oil level.
3. Air cleaner (if equipped).
4. Total control: Make sure there are no leaks, find loose or damaged parts.
5. Check the equipment powered engine.

⚠ **WARNING! Before starting the engine, remove all potential problems identified or ask your service technician to do it. Improper engine maintenance or failure to repair the identified defects before starting the engine can cause engine failure which may lead to your serious injury or death.**

HIGH ALTITUDE

High altitude performance can be improved by installing a smaller diameter main fuel jet in the carburetor. If you always operate the machine at altitudes higher than 1600 m above sea level, have your authorized dealer install the high altitude main jet.

EN

DE

CS

SK

PL

HU

FUEL

- THE ENGINE IS CERTIFIED FOR UNLEADED PETROL - NATURAL 95 (SUPER 95).
- Use clean, fresh, unleaded fuel of merchantable quality;
- **The machine is equipped with a four-stroke engine and must be operated exclusively with pure petrol WITHOUT oil!**

⚠ **WARNING! Petrol is highly flammable and explosive. During topping you can get seriously burned or injured.**

FUELING

⚠ **WARNING! Turn off the engine. Never remove the fuel cap or add fuel when the engine is running or is hot. After stopping the engine, wait at least 15 minutes until the engine cools.**

1. Remove the fuel filler cap ***(fig. 9A)***.
2. Fill petrol to maximum of one cm below the lower edge of the neck.
3. Don't overfill! Before starting the engine, wipe the spilled petrol.
4. All closures of the tank and bulk containers needs to be refitted and tightened.

⚠ **CAUTION! Never refill the petrol in a room.**

- Don't smoke or use an open flame during refilling.
- Make sure you are away from heat, sparks and flames.
- If petrol is spilled, don't start the engine. Immediately clean up the spilled petrol. Move the machine from the area, where the petrol has been spilled and wait until the fuel vapours dissipate to avoid the possibility of fire.
- Don't use petrol containing ethanol. Don't mix oil with petrol. For engine protection, we recommend using a fuel stabiliser, which is available at filling stations.
- Make sure that water and dirt doesn't get into the fuel tank.
- Fuel must not be older than 14 days.

ⓘ **Note: Fuel can damage paint and some types of plastics. When topping up the fuel tank, be careful and try not spill any petrol. Damages caused by spilling fuel are not covered by the warranty.**

ENGINE OIL

ⓘ **Note: This engine is delivered without oil, be sure to put oil in the engine before the starting. Use only below recommended types of oil.**

RECOMMENDED OIL

Use a four-stroke motor oil that meets or exceeds the requirements for performance class of SF, SG, SH API classification or their equivalent.
For general use all year round , we recommend **SAE 10W-30 HECHT 4T.**
For general use in winter it is recommended to use **SAE 5W-40, HECHT 5W-40.**
Choose the SAE oil viscosity grade to match the temperature conditions of the place of use ***(fig. 10)***.
DON'T MIX OILS!

HECHT® made for garden

OIL LEVEL CHECK

⚠ **CAUTION! Only check oil level with cold engine.**

1. Place engine level. Check the oil level with the engine stopped and cooled down.
2. Remove the oil filler cap/dipstick ***(fig. 11A)*** and wipe it clean.
3. Insert the oil filler cap/dipstick into the oil filler neck until it stops, but do not screw it in. Then remove it. Now read off the oil level on the dipstick.
4. If the oil level is near or below the lower limit mark on the dipstick, remove the oil filler cap/dipstick, and fill with the recommended oil into the engine between the upper and lower mark. Do not overfill.

⚠ **CAUTION! Running the engine with insufficient oil can cause serious engine damage.**

5. Reinstall the oil filler cap/dipstick.

OPERATING INSTRUCTIONS

TO START ENGINE

⚠ **WARNING! Do not start the engine until you have read this user manual.**

⚠ **WARNING! Once you start the engine, the blade starts to rotate.**

⚠ **WARNING! Carbon monoxide gas is toxic. Breathing it can cause unconsciousness and even kill you. Avoid any areas or actions that expose you to carbon monoxide.**

1. Ignition is connected through the cable and the spark plug cap (the rubber boot) with the spark plug. Check the connection ***(fig. 12A)***.
2. When starting cold engine, turn throttle choke lever ***(fig. 13A)*** to position. When starting warm engine turn throttle lever to position.
3. Standing behind the mower, grasp the brake control handle ***(fig. 14A)*** and hold it against the upper handle as shown in.
4. Grasp the starter handle ***(fig. 14B)*** and pull gently on the starter handle until it begins to resist, then pull quickly and forcefully upwards.

⚠ **CAUTION! Do not allow the starter grip to snap back against the engine. Return it gently to prevent damage to the starter.**

⚠ **CAUTION! Rapid retraction of starter cord (kickback) will pull hand and arm toward engine faster than you can let go. Broken bones, fractures, bruises or sprains could result.**

5. Return the starter handle slowly to the rope guide bolt after engine starts.
6. Operate the engine with throttle choke lever in the position.
7. Release the stop control handle to stop the engine and blade quickly if necessary.

⚠ **WARNING! Keep hands and feet away from the rotating blade.**

EN

- Do not tilt the lawn mower when starting the engine. Start the mower on a level surface, free of high grass or obstacles.
- Keep hands and feet away from the rotating parts.
- Do not start the engine when standing in front of the discharge opening.

DE

BRAKE HANDLE

⚠ **CAUTION! In order to avoid any unintentional start-ups of the lawn mower, it comes equipped with an engine brake which must be pulled back before the engine can be started. When the engine control lever is released it must return to its initial position, at which point the engine automatically switches off.**

- The brake is a basic safety component of a mower. Use the lever to stop the engine and blade rotation. When you release the lever the engine and the blade stop automatically.
- Before you start to mow, check the start/stop lever several times to be sure that it is working properly.
- Check that the brake cord can be smoothly operated. If the cord is kinked or damaged, it should be replaced.
- The run-down time depends on the state and wear of the brake. If the brake lever does not operate properly, contact an authorized service center.

CS

SK

During operation, always hold the handle and brake control handle firmly with both hands. During operation, when the stop control handle is released, the engine will stop and thus stopping the lawnmower from operating.

TO STOP ENGINE

⚠ **WARNING! The blade continues to rotate for a few seconds after the engine is shut off.**

PL

1. Release the brake control handle to stop the engine and blade.
2. Disconnect and ground the spark plug wire, to prevent accidental starting while equipment is unattended.

HU

GRASS CATCHER

⚠ **CAUTION! Danger - risk of injury! Only remove or attach the grass catcher with the motor switched off and the blade stationary.**

1. To fit: Raise the rear cover and hitch the grass catcher onto the holder on rear of mower ***(fig. 6)***.
2. To remove: grasp and lift rear cover. Lift the grass catcher out of the holder and backwards to remove it.

- If the grass catcher is full, empty and clean it and make sure it is clean and ensure its meshwork is ventilated.
- Emptying catcher before filling the maximum (at 50-70% content) will improve the collection of grass.

DECK

The underside of the mower deck should be cleaned after each use to prevent a buildup of grass clippings, leaves, dirt or other matter. If this debris is allowed to accumulate, it will invite

HECHT® made for garden

rust and corrosion, and may prevent proper operating. The deck may be cleaned by tilting the mower (spark plug up) and scraping clean with suitable tool (make certain the spark plug wire is disconnected).

HEIGHT ADJUSTMENT INSTRUCTIONS

⚠ **CAUTION! Do not at any time make any adjustment to lawnmower without first stopping the engine and disconnecting the spark plug wire.**

The mower can be adjusted by changing the position of wheels on three height.

1. Remove the wheel covers ***(fig. 15)***.
2. Use a wrench to unscrew the wheels ***(fig. 16)***.
3. Screw back the wheels in the desired position ***(fig. 17)***. Between the wheel and the body of the mower must be placed a small pad ***(fig. 18)***. All wheels must be set to the same height.

⚠ **CAUTION! Tighten the wheels securely.**

4. Put wheel cover.

FOR THE BEST RESULTS MOWING

Your mower is designed to cut normal residential grass of a height no more than 250 mm.

- Clear lawn of debris. Be sure that the lawn is clear of stones, sticks, wire or other foreign objects which could be accidentally thrown out by the mower or wrapped around the rotating parts. It may cause serious personal injury to the operator and others as well as damage to property and surrounding objects.
- Use a sharp cutting knife.
- Do not mow wet grass.
- Only move at working pace.
- Mow regularly, up to 2 cm (ie shorten from about 4 cm to 6 cm).
- Do not cut wet grass. For effective mowing do not cut wet grass because it tends to stick to the underside of the deck preventing proper mowing of the grass clippings.
- Cut no more than 1/3 the length of the grass.
- Ground speed will need to be adjusted so the clippings can be dispersed evenly into the lawn. For especially heavy cutting in thick grass it may be necessary to use one of the slowest speeds in order to get a clean well mowed cut. When mowing long grass you may have to cut the lawn in two passes, lowering the blade another 1/3 of the length for the second cut and perhaps cutting in a different pattern than was used the first time.
- Overlapping the cut a little on each pass will also help to clean up any stray clippings left on the lawn.
- The mower should always be operated at full throttle to get the best cut and allow it to do the most effective job of mowing.
- Clean underside of deck. Be certain to clean the underside of the cutting deck after each use to avoid a build-up of grass, which would prevent proper mulching.
- The mowing of leaves can also be beneficial to your lawn. When mowing leaves make sure they are dry and are not laying too thick on the lawn. Do not wait for all the leaves to be off the trees before you mow.

EN

DE

CS

SK

PL

HU

⚠ **CAUTION! If you strike a foreign object, stop the engine. Disconnect wire from spark plug, thoroughly inspect the mower for any damage and repair the damage before restarting and operating the mower. Extensive vibration of the mower during operation is an indication of damage (especially blade and shaft). The mower should be promptly inspected and repaired. Contact an authorized service center.**

MAINTENANCE

Good maintenance is essential for safe, economical and trouble-free operation.

⚠ **WARNING! Improper maintenance, or failure to correct a problem before operation or use of non-conforming replacement components, can cause malfunction in which you can be seriously hurt or killed.**

- **Disconnect the spark plug before performing any service on the machine. Wait till all moving parts are completely stopped.**
- Always follow the inspection and maintenance recommendations and schedules in this manual.
- To help you properly care for your engine, the following pages include a maintenance schedule, routine inspection procedures, and simple maintenance procedures using basic hand tools. Other service tasks that are more difficult, or require special tools, must be performed by an authorized service centre.
- The maintenance schedule applies to normal operating conditions. If you operate your engine under severe conditions, such as sustained high-load or high-temperature operation, or use in unusual wet or dusty conditions, consult your servicing dealer for recommendations applicable to your individual needs and use.
- After finishing season carefully clean the machine and all metal and moving parts lubricate by grease or oil so that the machine would be prepared for next season. Before next operation with the machine carefully check all the components.
- Frequently check fastening of all screws, nuts etc. in order to keep the machine in safe working condition.
- Once in the season let inspect and maintain the machine in authorised service center.

⚠ **WARNING! Failure to properly follow maintenance instructions and precautions can cause you to be seriously hurt or killed. Always follow the procedures and precautions in this owner's manual.**

MACHINE MAINTENANCE

- Careful handling and regular cleaning ensure that the machine remains functional and efficient for a long time.
- Keep the machine in good condition, if necessary change warning and instruction labels on the machine.
- Keep all nuts, bolts and screws tight to be sure the equipment is in safe working condition.
- To reduce the fire hazard, keep the engine, silencer and petrol storage area free of all debris or excessive grease.
- Regularly check the blade for damage.
- Always ensure that the ventilation openings are kept clear of debris.
- Check the grass catcher frequently for wear or deterioration.

hecht® made for garden

- Before each use, check (eventually clean) the area under the cover of V-belt from dirt. A large number of grass residue can cause a falling of V-belt.
- Replace worn or damaged parts for safety. Use only original spare parts.

Be careful during adjustment of the mower to prevent entrapment of the fingers between moving blades and fixed parts of the mower.

CLEANING

CAUTION! Do not hose engine. Water can damage engine or contaminate the fuel system.

1. Allow engine to cool before cleaning to prevent your burning when handling with it.
2. After use, clean the outside of the machine, empty the grass-catcher and shake it to remove grass and other debris.
3. After each use, accurately clean the cutting deck to remove any grass remains or debris. Regularly remove grass and dirt from the blade. Clean under deck by tilting the machine so that the spark plug is always up.
4. Wipe the surface of the machine and engine cover with dry cloth. Clean the cover of the machine, especially the ventilation holes.
5. Do not let the handles contaminate with oil or grease. Clean the handle clean with a damp cloth washed in soapy water.
6. Do not use solvents or petrol! This can cause irreparable damage to the product. The plastic parts can be eaten away by chemicals.
7. Clean wheels, coat of grass can change the height of cut.
8. If any of the parts of the machine is cleaned by water or a damp cloth, etc., it must be completely dry. Then the metal parts must be grease against the corrosion with suitable protective oil. Make sure that the water doesn´t leak into the internal parts of the machine.
9. If there is a connection to a garden hose on part of the machine, it is possible this part wash by water. Then it is necessary the whole washed part of the machine and places where the water were sprayed when cleaning, completely dry and grease agains the corrosion with suitable protective oil.
10. We do not recommend washing the machines with pressure washer.
11. Potential damage of the parts due to corrosion, can not be assessed as a manufacturing or material defect.

In any case, do not wash by water the parts of machine, which are not intended for it.

Always empty the grass-catcher and do not leave containers full of cut grass inside a room.

Never use aggressive detergents or solvents for cleaning.

LUBRICATION INSTRUCTIONS

WARNING! Disconnect spark plug before servicing!

1.	WHEELS	Lubricate the ball bearings (if equipped) in each wheel at least once a season with a light oil.
2.	ENGINE	Follow engine manual for lubrication instructions.

3. BLADE CONTROL Lubricate the pivot points on the blade control handle and the brake cable at least once a season with light oil. The blade control must operate freely in both directions.

CUTTING BLADE

WARNING! Be sure to disconnect and ground the spark plug wire before working on the cutting blade to prevent accidental engine starting. Protect hands by using heavy gloves or a rag to grasp the cutting blades.

Tip mower with the spark plug up (the handle down). Remove the hex bolt and washer which hold the blade and blade adapter to the engine crankshaft. Remove the blade and adapter from the crankshaft ***(fig. 19)***. Bolt has a typical right-hand thread.

CAUTION! Periodically inspect the blade adapter for cracks, especially if you strike a foreign object. Replace when necessary and check the machine overall.

For best results your blade should be sharp. The blade may be resharpened by removing it and either grinding or filing the cutting edge keeping as close to the original bevel as possible. It is extremely important that each cutting edge receives an equal amount of grinding to prevent an unbalanced blade. Improper blade balance will result in excessive vibration causing eventual damage to the engine. The blade can be tested for balance for example by balancing it on a round shaft screwdriver ***(fig. 20)***. Remove metal from the heavy side by grinding until it balances evenly. Before reassembling the blade and the blade adapter to the mower, lubricate the engine crankshaft and the inner surface of the blade adapter with light oil.
Place the blade with the part number facing away from the adapter. Align the washer over the blade and insert the hex bolt. Tighten the hex bolt to the torque listed in the Specifications.

When you change the blade, must use the original blade (for order the blade, please contact your local dealer or call our company).

TORQUE FOR BLADE MOUNTING

Center bolt is tightened by force listed in the Specifications. To insure safe operation of your unit. ALL nuts and bolts must be checked periodically for correct tightness. After prolonged use, especially in sandy soil conditions, the blade will become worn and lose some of the original shape. Cutting efficiently will be reduced and the blade should be replaced. Replace with an approved factory replacement blade only. Possible damage resulting from blade unbalance condition is not the responsibility of the manufacturer. When you change the blade, must use the original blade (for order the blade, please contact your local dealer or call our company).

CAUTION! Do not touch rotating blade.

ENGINE MAINTENANCE

PRECAUTIONS DURING ENGINE MAINTENANCE

- Make sure the engine is off before you begin any maintenance or repairs. This will eliminate several potential hazards:
  - Carbon monoxide poisoning from engine exhaust - be sure there is adequate ventilation whenever you operate the engine.
  - Burns from hot parts - let the engine and exhaust system cool before touching.
  - Injury from moving parts.
  - Read the instructions before you start the engine.

- To reduce the possibility of fire or explosion, be careful when working around gasoline. Use only a nonflammable solvent, not gasoline, to clean parts. Keep cigarettes, sparks and flames away from all fuel related parts.
- Remember that an authorized servicing dealer of our company knows Your engine best and is fully equipped to maintain and repair it. To ensure the best quality and reliability, use only new genuine our parts for repair and replacement.

MAINTENANCE CHART

REGULAR SERVICE PERIOD Item perform at every indicated month or operating hour interval. Whichever comes first		Before each use	First month or 5 hours	Every 3 months or 25 hours	Every 6 months or 50 hours	Every year or 100 hours	Every 2 years or 250 hours
ENGINE OIL	check	•					
	replace		•	• (2)			
AIR FILTER	check	•					
	clean			• (1)			
	replace						•
SPARK PLUG	check adjust					•	
	replace						•
FLYWHEEL BRAKE PAD	check				•		
SPARK ARRESTER	clean					•	
FUEL TANK AND FILTER	clean			•		• (3)	
FUEL TUBE	check	every 2 years (replace if necessary) (3)					
VALVE CLEARANCE	check - adjust					• (3)	
COMBUSTION CHAMBER	clean	after every 200 hours (3)					

(1) Service more frequently when used in dusty areas.
(2) Change engine oil more frequently when used under heavy load or in high ambient temperatures.
(3) These items should be serviced by an authorized servicing dealer of our company, unless you have the proper tools and are mechanically proficient.

OIL CHANGE

It is recommended to ask authorized service for oil change.
Drain the engine oil when the engine is warm. Warm oil drains quickly and complete. **Attention: Do not drain oil when the engine is running!**
When you drain the oil from the top oil fill tube, the fuel tank must be empty or fuel can leak out and result in a fire or explosion.

1. Shut off the engine before performing any service on the machine. Wait till all moving parts are completely stopped and disconnect the spark plug.
2. Place a suitable container next to the engine to catch the used oil.
3. Remove the oil filler cap/dipstick ***(fig. 21A)***.
4. Remove the drain bolt ***(fig. 22A)*** and washer ***(fig. 22B)*** and allow the used oil to drain completely into the container.

EN

5. For engine without drain plug, we recommend to use oil extractor pump ***(fig. 23)***, or drain the oil into the container by slightly tilting the engine toward the oil filler cap/dipstick. Before tilting the machine, remove fuel from tank. Keep the spark plug end of the engine up.

Please dispose of used motor oil in a manner that is compatible with the environment. We suggest you take used oil in a sealed container to your local recycling center or service station for reclamation. Do not throw it in the trash or pour it on the ground or down a drain.

DE

6. Reinstall the drain bolt. With the engine in a level position, fill to the upper limit mark on the dipstick with the recommended oil.

CAUTION! Running the engine with a low oil level can cause engine damage.

CS

7. Reinstall the oil filler cap/dipstick securely.

CAUTION! Wash your hands with soap and water after handling used oil.

AIR FILTER

A dirty air filter will restrict air flow to the carburetor and cause poor engine performance. Inspect the air filter each time the engine is operated. You will need to clean the air filter more frequently if you operate the engine in very dusty areas.

SK

CAUTION! Operating the engine without an air filter, or with a damaged air filter, will allow dirt to enter the engine, causing rapid engine wear. This type of damage is not covered.

PL

AIR FILTER INSPECTION AND CLEANING

CAUTION! The air filter must be serviced (cleaned) after 25 hours normal working. Service more frequently when operating the machine in extremely dusty areas.

Determine the type installed on your engine and service as follows.

HU

Shut off the engine before performing any service on the machine. Wait till all moving parts are completely stopped and disconnect the spark plug.

	FOAM ELEMENT FILTER	PLEATED AIR FILTER
1.	Release the air filter cover ***(fig. 24A + 25A)***.	
2.	Remove the air filter cover ***(fig. 25B)***. Be careful to prevent dirt and debris from falling into the air filter base.	
3.	Remove the air filter from the air filter base.	

HECHT® made for garden

4.	Wash the foam element ***(fig. 25C)*** in liquid detergent and water. DO NOT USE GASOLINE!	To loosen debris, gently tap the filter ***(fig. 25E)*** on a hard surface. Never try to brush the dirt off, brushing will force dirt into the fibers. If the filter is excessively dirty, replace with a new filter.
5.	Air dry filter element.	
6.	Place a few drops of motor oil on the foam filter and squeeze tightly to evenly distribute the oil remove and to any excess oil.	
7.	Install the filter back.	
8.	Close the cover ***(fig. 25B)*** and secure it.	

Note: Replace filter if frayed, torn, damaged or unable to be cleaned.

SPARK PLUG

For best results, replace the spark plug every 100 hours of use. Use only the recommended spark plug which is the correct heat range for normal engine operating temperatures. To find actual types of recommended spark plugs please contact an authorized service center.

CAUTION! If the engine has been running, the muffler and the spark plug will be very hot. Be carefull not to touch this parts.

Note: Incorrect spark plugs can cause engine damage.

For good performance, the spark plug must be properly gapped and free of deposits.

1. Shut off the engine before performing any service on the machine. Wait till all moving parts are completely stopped.
2. Disconnect the cap from the spark plug ***(fig. 26A)***, and remove any dirt from the spark plug area.
3. Use the proper size spark plug wrench ***(fig. 26B)*** to remove the spark plug.
4. Inspect the spark plug. Replace it if damaged, badly fouled, if the sealing washer is in poor condition, or if the electrode is worn.
5. Measure the electrode gap ***(fig. 27A)*** with a suitable gauge ***(fig. 27B)***. The correct gap is listed in the Specifications. If adjustment is needed, correct the gap by carefully bending the side electrode.
6. Install the spark plug carefully, by hand, to avoid cross-threading.
7. After the spark plug is seated, tighten with the proper size spark plug wrench to compress the washer.
8. When installing a new spark plug, tighten by 1/2 turn after the spark plug seats to compress the washer.
9. When reinstalling the original spark plug, tighten by 1/8 - 1/4 turn after the spark plug seats to compress the washer.

Note: A loose spark plug can become very hot and can damage the engine. Over tightening the spark plug can damage the threads in the cylinder head.

10. Attach the spark plug cap to the spark plug.

EN

DE

CS

SK

PL

HU

MUFFLER AND SPARK ARRESTER

⚠ **CAUTION! Running engines produce heat. Engine parts, especially muffler, become extremely hot. Severe thermal burns can occur on contact. Combustible debris, such as leaves, grass, brush, etc. can catch fire.**

- Allow muffler, engine cylinder and fins to cool before touching.
- Remove accumulated debris from muffler area and cylinder area.
- Contact the original equipment manufacturer, retailer, or dealer to obtain a spark arrester designed for the exhaust system installed on this engine.

Remove accumulated debris from muffler area and cylinder area. Inspect the muffler for cracks, corrosion, or other damage. Remove the spark arrester, if equipped, and inspect for damage or carbon blockage. If damage is found, install replacement parts before operating.

⚠ **CAUTION! Replacement parts must be of the same design and installed in the same position as the original parts. Other parts may not perform as well, may damage the unit, and may result in injury.**

CARBON SEDIMENTS

It is recommended to remove carbon sediments from cylinder, piston upper side and valves surrounding each 100 – 300 operating hours in authorised service center.

FUEL SYSTEM

⚠ **CAUTION! Spare parts of fuel system (plugs, hoses, tanks, filters etc.) must be the same as original otherwise arises danger of fire.**

- Regularly check the condition of fuel hoses.
- Replace the fuel hose every 2 years. If fuel leaks from fuel hose, replace the fuel hose immediately.

REMOVAL OF DIRT

Each day or before each use remove from the engine settled dirt. Keep clean draw bars, springs and control elements. Remove flammable rests from muffler surrounding.

⚠ **CAUTION! Never clean the engine by water. Water could penetrate into fuel system. Use brush or dry cleaning rag.**

⚠ **CAUTION! Engine and his parts have to be kept clean in order to avoid overheating and ignition of dirt layer.**

DRAINING THE FUEL TANK AND CARBURETOR

⚠ **WARNING! Gasoline is highly flammable and explosive, and you can be burned or seriously injured when handling fuel.**

- Stop engine, allow it to cool completely and keep heat, sparks, and flame away.
- Refuel only outdoors.
- Wipe up spills immediately.

HECHT® made for garden

1. Place an approved gasoline container below the carburetor ***(fig. 28C)***, and use a funnel to avoid spilling fuel.
2. Remove the drain bolt ***(fig. 28A)***, then move the fuel valve lever to the ON position (if it is equipped).
3. After all the fuel has drained into the container, reinstall the drain bolt and washer ***(fig. 28B)***. Tighten the drain bolt securely.

FUEL STRAINER CLEANING

WARNING! Gasoline is extremely flammable and is explosive under certain conditions. Do not smoke or allow flames or sparks in the area open fire.

1. Remove the fuel strainer ***(fig. 29A)*** from the fuel tank.
2. Clean the fuel strainer (remove dirt which has accumulated on the mesh, and check that the mesh is not broken anywhere).
3. Reinstall the fuel strainer and fuel line.

CLEAN AIR COOLING SYSTEM

CAUTION! Running engines produce heat. Engine parts, especially muffler, become extremely hot. Severe thermal burns can occur on contact. Combustible debris, such as leaves, grass, brush, etc. can catch fire.

- Allow muffler, engine cylinder and fins to cool before touching.
- Remove accumulated debris from muffler area and cylinder area.

Note: Do not use water to clean the engine. Water could contaminate the fuel system. Use a brush or dry cloth to clean the engine. This is an air cooled engine. Dirt or debris can restrict air flow and cause the engine to overheat, resulting in poor performance and reduced engine life.

ENGINE BRAKE / FLYWHEEL BRAKE

Periodically check that the brake is working properly. Pay attention to the proper maintenance of the brake. Maintenance and repairs of the brake can only be performed by an authorized service center.

Attention! Never use a mower with damaged or long time reacting flywheel brake.

ENGINE ADJUSTMENTS

Note: Do not change in any way the rated speed of the engine (carburetor side or regulator side).

Your engine was adjusted in the factory and the non-respect of the homologation speed engine could be dangerous for your safety and others safety. If the motor settings is changed in any way, the warranty will be cancelled.

STORAGE

⚠ **CAUTION! The engine must have completely cooled down before storing the machine.**

- Never store the equipment with petrol in the tank inside a building where fumes can reach an open flame or spark.
- Allow the engine to cool before storing in any enclosure.
- Replace worn or damaged parts for safety. Use only original spare parts.
- If the fuel tank has to be drained, this should be done outdoors.

STORAGE INSTRUCTIONS FOR YOUR ENGINE

⚠ **CAUTION! Never store engine in vicinity of stoves ovens water heaters with pilot light contingently other devices which can produce sparks.**

STORAGE PREPARATION

Proper storage preparation is essential for keeping your engine trouble free and looking good. The following steps will help to keep rust and corrosion from impairing your engine's function and appearance, and will make the engine easier to start when you use it again.

CLEANING

If the engine has been running, allow it to cool for at least half an hour before cleaning. Clean all exterior surfaces, touch up any damaged paint, and coat other areas that may rust with a light film of oil.

ⓘ **Note: Using a garden hose or pressure washing equipment can force water into the air cleaner or muffler opening. Water in the air cleaner will soak the air filter, and water that passes through the air filter or muffler can enter the cylinder, causing damage.**

STORAGE PRECAUTIONS

- If your engine will be stored with gasoline in the fuel tank and carburetor, it is important to reduce the hazard of gasoline vapor ignition. Select a well-ventilated storage area away from any appliance that operates with a flame, such as a furnace, water heater, or clothes dryer.
- Also avoid any area with a spark producing electric motor, or where power tools are operated.
- If possible, avoid storage areas with high humidity, because that promotes rust and corrosion.
- If there is gasoline in the fuel tank, leave the fuel valve in OFF position.
- Keep the engine level in storage. Tilting can cause fuel or oil leakage.
- With the engine and exhaust system cool, cover the engine to keep out dust. A hot engine and exhaust system can ignite or melt some materials.
- Do not use sheet plastic as a dust cover. A nonporous cover will trap moisture around the engine, promoting rust and corrosion.

ADDING A GASOLINE STABILIZER TO EXTEND FUEL STORAGE LIFE

For engine protection use Fuel stabiliser which is available at petrol stations.
When adding a gasoline stabilizer, fill the fuel tank with fresh gasoline. If only partially filled, air in the tank will promote fuel deterioration during storage. If you keep a container of gasoline for refueling, be sure that it contains only fresh gasoline.

1. Add gasoline stabilizer following the manufacturer's instructions.
2. After adding a gasoline stabilizer, run the engine outdoors for 10 minutes to be sure that treated gasoline has replaced the untreated gasoline in the carburetor.

OFF SEASON STORAGE

If your engine will be stored with gasoline in the fuel tank and carburetor, gasoline will oxidize and deteriorate. Old gasoline will cause hard starting, and it leaves gum deposits that clog the fuel system. If the gasoline in your engine deteriorates during storage, you may need to have the carburetor and other fuel system components serviced or replaced. The fuel can not be in the engine longer than 14 days. If you leave it there longer it can cause damages on the engine, these damages are not covered in the warranty. The addition of a fuel stabilizer to gasoline can extend the life of fuel.

The following steps should be taken to prepare machine for storage.

1. Empty the petrol tank with a suction pump after the last working of the season.

WARNING! Do not drain the petrol in closed rooms, in close proximity of open fire, etc. Do not smoke! Petrol fumes can cause explosion or fire.

2. Start the engine and let it run until it has used up all remaining petrol and stalls.
3. Remove the spark plug. Use an oilcan to fill approx. 20 ml recommended motor oil into the combustion chamber. Operate the starter to evenly distribute the oil in the combustion chamber. Replace the spark plug.
4. Replace spark plug.
5. Replace engine oil.

REMOVAL FROM STORAGE

Check your engine as described in the BEFORE OPERATION CHECKS section of this manual.
If the fuel was drained during storage preparation, fill the tank with fresh gasoline. If you keep a container of gasoline for refueling, be sure it contains only fresh gasoline. Gasoline oxidizes and deteriorates over time, causing hard starting and clogging.
If the cylinder was coated with oil during storage preparation, the engine will smoke briefly at startup. This is normal.

FUEL STORAGE

- Store the gasoline only in special can, otherwise there is a risk of fuel contamination.
- Never store engine in vicinity of stoves, ovens, water heaters with pilot light, contingently other devices which can produce sparks.
- If you use contaminated gasoline there is a risk of irregular engine running or its damage.
- Store minimum quantity of the fuel which you can use to 14 days. Do not use fuel older than 14 days.

DEVICE-SPECIFIC STORAGE INSTRUCTIONS

1. Store the machine in a dry, clean and frost-protected place, out of reach of unauthorized persons.
2. Cover unit with a suitable protective cover that does not retain moisture. Do not use sheet plastic as a dust cover. A nonporous cover will trap moisture around the mower, promoting rust and corrosion.

3. Keep the machine in good condition, if necessary change warning and instruction labels on the machine.
4. Clean and maintain the machine before storage. Failure to correct a problem before operation can cause malfunction in which you can be seriously hurt or killed.
5. Clean and grease the lawnmower carefully as described above under "LUBRICATION INSTRUCTIONS".
6. Carefully clean machine parts and accessories after each use (see Maintenance and cleaning instructions). This will prevent the formation of mold.
7. Carefully remove any dry grass cuttings and excess grease which may have collected around the engine, silencer, battery (if equipped) or fuel tank to prevent their catching fire the next time the machine is used!
8. Slightly grease the cutting area to avoid corrosion.
9. Be careful not to bend or kink cables.

Note: When storing care should be taken to rust-proof the equipment. Using a light oil or silicone, coat the equipment, especially all metal parts and all moving parts.

TRANSPORTING

When moving the machine, the blades must be disengaged and the cutting deck raised as high as possible.

- Disengage the blades before crossing surfaces other than grass.
- Ensure not to bend or damage the cutter when pushing the lawnmower over obstacles.

TRANSPORT ON THE TRAILER

CAUTION! Let the engine to cool down before transporting the machine.

The fuel tank must be empty. Spilled fuel or fuel vapor may ignite.

1. Empty the fuel tank before transporting the machine.
2. Empty the petrol tank with a suction pump. Start the engine and let it run until it has used up all remaining petrol and stalls.
3. Close the fuel cap firmly.
4. Turn the engine switch and fuel valve (if equipped) to the off or stop position.
5. Let the engine to cool down before transporting.
6. Take care not to drop or strike the machine when transporting.
7. Tie down the machine securely in an upright position while transporting.
8. Take care not to strike the machine when transporting. Do not place objects on the machine.

TROUBLESHOOTING

Note: Failures of your machine which require larger interference must always be eliminated by specialized workshop. Unauthorized interferences can cause damages. If you can not rectify the fault using the measures described here, contact an authorized service center.

HECHT®
made for garden

PROBLEM	PROBABLE CAUSE	CORRECTIVE ACTION
Engine does not start.	Incorrect starting procedure	Follow the chapter Start the engine.
	Choke lever is not in the correct position.	Move choke lever to correct position.
	Fuel tank is empty.	Fill tank with fuel.
	Air filter element is clogged.	Clean air filter element
	Spark plug loose.	Tighten the spark plug to the recommended torque - see Specifications
	Spark plug wire loose or disconnected from plug.	Install spark plug wire on spark plug.
	Spark plug gap is incorrect.	Set the correct gap between the electrodes - see Specifications
	Spark plug is defective	Install new, correctly gapped plug
	Carburetor is flooded with fuel	Remove air filter element, spark plug and pull starter rope continuously until carburetor clears itself and install air filter element, and cleaned spark plug back. Start without choke.
	Faulty ignition module	Contact the authorized service agent.
Engine difficult to start or loses power.	Dirt, water, or stale fuel tank.	Drain fuel and clean tank. Fill tank with clean, fresh fuel
	Vent hole in fuel tank cap is plugged	Clean or replace fuel tank cap.
	Air filter element is clogged.	Clean air filter element.
Engine operates erratically.	Spark plug is defective.	Install new, correctly gapped plug
	Spark plug gap is incorrect.	Set the correct gap between the electrodes - see Specifications
	Air filter element is clogged.	Clean air filter element
Engine idles poorly.	Air filter element is clogged.	Clean air filter element
	Air slots in engine shroud are clogged.	Remove debris from slots.
	Cooling fins and air passages under engine blower housing are clogged.	Remove debris from cooling fins and air passages.
Engine skips at higher speeds.	Gap between electrodes of spark plug is too close.	Set the correct gap between the electrodes - see Specifications
Engine overheats	Cooling air flow is clogged.	Remove any debris from slots in shroud, blower housing, all air passages
	Incorrect spark plug.	Install original spark plug.
Mower vibrates abnormally	Cutting assembly is loose.	Tighten blade
	Cutting assembly is unbalanced	Balance blade.

WARNING! Faults which can not be rectified with the aid of this table may be rectified by a authorized service centre.

EN

TECHNICAL & CONSUMER INFORMATION

SERIAL NUMBER LOCATION

Record the engine serial number ***(fig. 30A)*** in the space below. You will need this information when ordering parts and when making technical or warranty inquiries.

Engine serial number:_____

DE

SERVICE AND SPARE PARTS

- Have your device serviced by a qualified repair personnel using only identical replacement parts. This will ensure that the safety of the device is maintained.
- Whether you need technical advice, repair, or genuine factory replacement parts, contact the HECHT authorized service nearest you. Information on service locations, visit **www.hecht.cz.**
- When ordering spare parts, please quote the part number, this can be found at **www.hecht.cz.**

CS

SK

DISPOSAL

- Dispose your device, accessories and packaging in accordance with the requirements of environmental protection into the recycling collection center.
- This machine does not belong to the household waste. Save the environment and take this device to designated collection points where it will be received for free. For more information please contact your local authority or nearest collection point. Improper disposal may be punished according to national regulations.
- Petrol and oil is hazardous waste. Dispose it in right way. It does not belong to house garbage. Regarding oil and fuel disposal contact local authorities, service center or your dealer.

PL

HU

GUARANTEE OF THE PRODUCT

- For this product we provide a legal warranty, legal responsibility from the defects, for 24 months from receipt.
- For corporate, commercial, municipal and other than private use is valid a quality-guarantee upon receipt for 6 months, for Briggs&Stratton engines is valid a quality-guarantee upon receipt for 90 days.
- All products are designed for home use, unless there is another information in the instruction manual or operation description. When using otherwise or in contradiction with instruction manual the claim is not recognized as legitimate.
- Inappropriate product selection and the fact that the product does not meet your requirements can not be a reason for complaint. Buyer is familiar with the properties of the product.
- Buyer has the right to ask the seller to check the functionality of the product and become familiar with its operation.
- A prerequisite for receiving warranty claims is that the guidelines for operating, servicing, cleaning, storage and maintenance were followed.

- Damage caused by natural wear and tear, overloading, improper use or intervention outside the authorized service during the warranty period, are excluded from the guarantee.
- Warranty does not cover wear and tear caused by the usual usage.
- Warranty does not cover wear and tear of components known as common consumables (eg. service charges, filters, blades, V-belts and toothed belts, chains, carbons, seals, spark plugs, bearings ....).
- From the warranty are excluded wear and tear of the product or parts caused by normal use of the product or parts of the product and other parts subject to natural wear and tear.
- By the goods sold at a lower price, the warranty does not cover defects for which the lower price was negotiated.
- Damage resulting from defects in material or manufacturer error will be eliminated free of charge by replacement delivery or repair. It is assumed that the product returns to our service center undismantled and with proof of purchase.
- Cleaning, maintenance, inspection and alignment tools aren´t the warranty act and are paid services.
- For repairs that are not subject to warranty, you can have it repaired in our service center as paid service. Our service center will be happy to draw up a costs budget.
- We shall consider the products only that have been delivered clean, complete, in case of sending also packed sufficiently and paid. Products sent as unpaid, as bulky goods, express or by special shipping - will not be accepted.
- In case of justified warranty claim, please contact our service center. There you will receive additional information on processing claims.
- Information about service locations see at **www.hecht.cz**
- We dispose of your old electrical appliances free of charge.

GUARANTEE OF THE ENGINE

NORMAL WEAR:
Similarly as all mechanical devices, the engines need periodical service and spare parts replacement in order to work correctly. Guarantee is not related to such repairs when lifetime of the part of engine was exhausted by normal operation.

INCORRECT MAINTENANCE:
Lifetime of the engine depends on conditions, in which it is operated and on care which is given to it. The guarantee does not relate to wearing caused by dust, dirt, sand or other abrasive materials which penetrated into engine in consequence with incorrect maintenance. This guarantee relates only to material and production defects. Therefore do not ask replacement of back payment of devices in which can be assembled the engine. The guarantee does not relate either for repairs caused by:

- Using other than original spare parts.
- Control elements or devices which make starting difficult, cause power output reduction and reduce its lifetime (contact producer of the device).
- Untight carburetors, stopped fuel pipes, seized valves or other defects, caused by using dirty or old fuel. Use only fresh plumb free petrol **and fuel stabiliser.**
- Parts which are rubbed out or broken due to operation with unsufficient oil level, using dirty or oil incorrect specifications. Use the oil recommended by the manufacturer.
- Repair or adjustment of connected parts or assembly, e.g. gear couplings, remote controls and similar, not original ones.

- Damage or wear of parts caused by dirt particles which penetrated into engine due to incorrect maintenance or assembly of air filter or using non original cleaner or filter inlay.
- Parts which were damaged due to engine overspeeding or overheating caused by clogging or blocking cooling ribs or flywheel space by grass, chips or dirts or damages caused by engine operation in closed room.
- Engine damage or its parts by enormal vibrations caused by loosening engine assembly, mowing knives, loosened or unbalanced flywheels, incorrect fastening device to engine shaft, overspeeding or other incorrect operation.
- Bended or broken crankshaft after hitting to rigid object or for V-belts overtensioning.
- Engine damaged or its part e.g. combustion chamber, valves, valve saddles, valve leading or burning starter coil as result of using incorrect fuel – for example liquid gas, natural gas, incorrect petrol etc.

HECHT®
made for garden

RECOMMENDED ACCESSORIES / EMPFOHLENES ZUBEHÖR / DOPORUČENÉ PŘÍSLUŠENSTVÍ / DOPORUČENÉ PRÍSLUŠENSTVO / ZALECANE WYPOSAŻENIE / AJÁNLOTT TARTOZÉKOK

KANYSTR 5 L

- 5LTR PLASTIC FUEL CAN / 5 LITER BENZINKANISTER / KANYSTR NA 5 L BENZÍNU / BANDASKA NA 5 L BENZÍNU / KANISTER NA BENZYNĘ 5 L / KANNA 5 L

HECHT 4T

- ENGINE OIL / MOTORÖL / MOTOROVÝ OLEJ / MOTOROVÝ OLEJ / OLEJ SILNIKOWY / MOTOROLAJ

HECHT 5

- SERVICE KIT / SERVICE-KIT / SERVISNÍ SADA / SERVISNÁ SADA / ZESTAW NAPRAWCZY / KARBANTARTÓ KÉSZLET

HECHT 900106

- SAFETY GOGGLES / SCHUTZBRILLE / OCHRANA OČÍ / OCHRANNÉ OKULIARE / OCHRONA OCZU / VÉDŐSZEMÜVEG

HECHT 900102

- EAR PROTECTION / GEHÖRSCHUTZ / OCHRANA SLUCHU / OCHRANA SLUCHU / OCHRONA SŁUCHU / FÜLVÉDŐ

EC DECLARATION OF CONFORMITY / EG-KONFORMITÄTSERKLÄRUNG / ES PROHLÁŠENÍ O SHODĚ / ES VYHLÁSENIE O ZHODE / DEKLARACJA ZGODNOŚCI WE / EK MEGFELELŐSÉGI NYILATKOZAT

EN We, the manufacturer of the device and the holder of the documents for issuing this "EC Declaration of Conformity" / DE Wir, der Hersteller des Gerätes und Inhaber der Dokumente für die Ausstellung der "EG-Konformitätserklärung" / CS My, výrobce uvedeného zařízení a držitel podkladů k vydání tohoto „ES prohlášení o shodě" / SK My, výrobca uvedeného zariadenia a držiteľ podkladov k vydaniu tohto "ES vyhlásenia o zhode" / PL My, producenci urządzenia i posiadacze dokumentów wydanych na podstawie „Deklaracji Zgodności" / HU A gyártó, az alább feltüntetett termékre, a jelen EK megfelelőségi nyilatkozatot adja ki.

HECHT MOTORS s r.o., Za Mlýnem 25/1562, 147 00 Praha 4, Czech Republic, IČO 61461661

EN Declare on our own responsibility / DE Auf unser eigene Verantwortung diese Aussage / CS Vydáváme na vlastní zodpovědnost toto prohlášení / SK Vydávame na vlastnú zodpovednosť toto vyhlásenie / PL Wydajemy na własną odpowiedzialność tę deklarację / HU Felelősségünk tudatában kijelentjük, hogy az alábbi

EN Machinery / DE Maschinen / CS Strojní zařízení / SK Strojné zariadenie / PL Maszyny / HU Gépi berendezés

EN Petrol lawn mower / DE Benzin-Rasenmäher / CS Motorová sekačka / SK Motorová kosačka / PL Kosiarka spalinowa / HU Motoros fűnyírógép

EN Trade name and type / DE Handelsname und Typ / CS Obchodní název a typ / SK Obchodný názov a typ / PL Nazwa firmy i rodzaj / HU Kereskedelmi megnevezés és típus

Hecht 540, Hecht 4041, Hecht 4042

EN Model / DE Modell / CS Model / SK Model / PL Model / HU Modell

DY162-098PB

EN The procedure used for the assessment of the conformity / DE Verfahren zur Beurteilung der Übereinstimmung / CS Postup použitý při posouzení shody / SK Postup použitý na posúdenie zhody / PL Stosowana procedura oceny zgodności / HU Megfelel a termék megfelelőségének a kiértékeléséhez felhasznált

EN under Directive 2000/14/EC, Annex VI. as amended by 2005/88/EC	**DE unter der Richtlinie 2000/14/EG, Anhang VI. wie durch 2005/88/EG geändert**	**CS podle směrnice 2000/14/ES, příloha VI. v platném znění 2005/88/ES**	**SK podľa smernice 2000/14/ES, príloha VI. v platnom znení 2005/88/ES**	**PL Dyrektywą 2000/14/WE, załącznik VI. z późniejszymi zmianami 2005/88/WE**	**HU 2000/14/EK irányelv VI. mellékletében, és a 2005/88/EK irányelvben meghatározott követelményeknek.**

EN This declaration was issued on the basis of certificate and measurement protocols of / DE Die Konformitätserklärung wurde auf der Grundlage des Zertifikats und Messprotokolle der ausgegebenen / CS Toto prohlášení o shodě bylo vydáno na základě certifikátů a měřicích protokolů společnosti / SK Toto vyhlásenie o zhode bolo vydané na základe certifikátu a meracích protokolov spoločnosti / PL Niniejsza deklaracja zgodności została wydana na podstawie certyfikatu i protokołów pomiarowych / HU A megfelelőségi nyilatkozatot az alábbi vizsgáló intézet által elvégzett típusvizsgálati jegyzőkönyv alapján adtuk ki:

VCA Headquarters, United Kingdom;
Intertek Testing Services Hangzhou, P.R.C.;
Intertek Testing Sesrvices Shanghai Ltd., P.R.C.;
Intertek Testing & Certification Ltd., P.R.C.

EN This declaration of conformity is issued in accordance with EU directives / DE Die "EG-Konformitätserklärung" wird gemäß den EU-Richtlinien herausgegeben / CS Toto prohlášení o shodě je vydáno v souladu se směrnicemi EU / SK Toto vyhlásenie o zhode je vydané v súlade so smernicami EÚ / PL Ta deklaracja zgodności wydana zgodnie z dyrektywami UE / HU A jelen megfelelőségi nyilatkozatot az alábbi EK rendeletekkel összhangban adtuk ki:

2014/30/EU; 2006/42/EC; 2000/14/EC & 2005/88/EC; 97/68/EC & 2012/46/EU

EN Engine type / DE Motoreinheit / CS Typ motoru / SK Typ motora / PL Typ silnika / HU Motor típusa

DY1P56F

EN Validating number / DE Validieren Nummer / CS Schvalovací emisní číslo / SK Schvaľovacie emisné číslo / PL Numer identyfikacyjny / HU Jóváhagyási szám

e11*97/68SA*2012/46*1273*01

EN The following harmonised norms are used for guarantee of conformity, together with the national norms and regulations / DE Der Bürgschaftsvertrag, den folgenden harmonisierten Normen sowie nationale Normen und Bestimmungen / CS Na zaručení shody se používají následující harmonizované normy, jako i národní normy a ustanovení / SK Na zaručenie zhody sa používajú nasledujúce harmonizované normy, ako aj národne normy a ustanovenia / PL Zapewnienia zgodności, z następującymi normami zharmonizowanymi, a także krajowe normy i przepisy / HU A megfelelőségi nyilatkozat kiadásához az alábbi harmonizált szabványokat és rendelkezéseket vettük figyelembe:

EN ISO 5395-1; EN ISO 5395-2; EN ISO 14982; EN ISO 3744; ISO 11094

EN Guaranteed sound power level / DE Garantierter Schallleistungspegel / CS Garantovaná hladina akustického výkonu / SK Garantovaná hladina akustického výkonu / PL Gwarantowany poziom mocy akustycznej / HU Garantált akusztikus teljesítményszint

L_{WA} = 96 dB (A)

EN Measured sound power level / DE Gemessener Schallleistungspegel / CS Naměřená hladina akustického výkonu / SK Nameraná hladina akustického výkonu / PL Zmierzony poziom mocy akustycznej / HU Mért zajszint

L_{wA} = 93 dB (A)

EN Number of the noise measurement protocol demonstrating compliance with the requirements of Directive 2005/88/EC / DE Nummer des Lärmmessungsprotokolls als Nachweis der Übereinstimmung mit den Anforderungen der Richtline 2005/88/EC / CS Číslo protokolu měření hluku dokládající splnění požadavků směrnice 2005/88/EC / SK Číslo protokolu merania hluku potvrdzujúce splnenie požiadaviek smernice 2005/88/EC / PL Protokół pomiarów hałasu potwierdzający zgodność z wymogami dyrektywy 2005/88/EC / HU A 2005/88/EC irányelv szerint végrehajtott zajmérési jegyzőkönyv száma

SH09120910-001

EN We confirm hereby that

- this machine device, defined by mentioned data, is in conformity with basic requirements mentioned in government regulations and technical requirements and is safe for usual operation, contigently for the use determined by manufacturer; - there were taken measures to ensure the conformity of all products introduced to the market with the technical documentation and requirements of the technical regulations

DE Wir bestätigen, dass

- die Maschinen Angabe definiert, ist es in Übereinstimmung mit den Anforderungen der NV und TP gelegt, und unter normalen oder beabsichtigten Verwendung der sicheren Herstellers; - sind zur Einhaltung aller in Verkehr gebrachten Produkten mit technischer Dokumentation und Anforderungen der technischen Vorschriften zu gewährleisten

CS Potvrzujeme, že

- toto strojní zařízení, definované uvedenými údaji, je ve shodě se základními požadavky uvedenými v NV a TP a je za podmínek obvyklého, popřípadě výrobcem určeného použití bezpečné; - jsou přijata opatření k zabezpečení shody všech výrobků uváděných na trh s technickou dokumentací a požadavky technických předpisů

SK Potvrdzujeme, že

- toto strojné zariadenie, definované uvedenými údajmi, je v zhode so základnými požiadavkami uvedenými v NV a TP a je za podmienok obvyklého, poprípade výrobcom určeného používania bezpečné; - sú prijaté opatrenia k zabezpečeniu zhody všetkých výrobkov uvedených na trh s technickou dokumentáciou a požiadavkami technických predpisov

PL Oświadczamy, że

- niniejsze urządzenie mechaniczne, charakteryzujące się wymienionymi powyżej danymi jest zgodne z podstawowymi wymaganiami wymienionymi w NV i TP i jest pod warunkiem zwyczajnego użytkowania, lub użytkowania określonego przez producenta, bezpieczne w użytkowaniu; - podjęto kroki w celu zabezpieczenia zgodności wszystkich produktów wprowadzonych na rynek z techniczną dokumentacją i wymaganiami technicznych przepisów

HU Igazoljuk, hogy:

- a jelen gépi berendezés megfelel a használati útmutatóban és a műszaki adatoknál feltüntetett paraméterek-nek, továbbá a gép a normál és a gyártó által előírt használat esetén biztonságos;
- a gyártó minden terméket a műszaki dokumentációkban és az egyéb műszaki előírásokban meghatározott paraméterekkel gyárt le.

EN In Prague on / DE In Prag von / CS V Praze dne / SK V Prahe dňa / PL W Pradze w dniu / HU Prága, dátum:

15. 11. 2016

EN Name / DE Name / CS Jméno / SK Meno / PL Imię / HU Név

Rudolf Runštuk

EN Title: Executive Director / DE Position: Geschäftsführer / CS Funkce: jednatel společnosti / SK Funkcia: konateľ spoločnosti / PL Stanowisko: Prezes / HU Beosztás: ügyvezető igazgató

HECHT made for garden
HECHT MOTORS s.r.o.
Za mlýnem 1562/25, 147 00 Praha 4
IČO: 614 616 61, DIČ: CZ 61461661

HECHT made for garden

CONFIRMATION OF FAMILIARITY WITH THE OPERATION OF THE DEVICE / ANERKENNUNG DER NUTZUNGS- UND GARANTIEBEDINGUNGEN / POTVRZENÍ O SEZNÁMENÍ SE S OBSLUHOU ZAŘÍZENÍ / POTVRDENIE O ZOZNÁMENÍ SA S OBSLUHOU ZARIADENIA / POTWIERDZENIE ZAPOZNANIA SIĘ Z EKSPLOATACJĄ URZĄDZENIA / A GÉP ÁTVÉTELÉNEK ÉS BEMUTATÁSÁNAK AZ IGAZOLÁSA

EN The name of device * / DE Gerätename * / CS Název zařízení * / SK Názov zariadenia * / PL Nazwa sprzętu * / HU Gép megnevezése *
EN Model * / DE Model * / CS Model * / SK Model * / PL Model * / HU Modell *
EN Date of purchase * / DE Kaufdatum * / CS Datum prodeje * / SK Dátum predaja * / PL Data sprzedaży * / HU Értékesítés időpontja *
EN Serial number of the machine * / DE Maschine Seriennummer * / CS Výrobní číslo stroje * / SK Výrobné číslo stroja * / PL Nr. fabryczny urządzenia * / HU Gép gyártás száma *
EN Production date of the battery * / DE Herstellungs-datum der Batterie * / CS Datum výroby baterie * / SK Dátum výroby batérie * / PL Data produkcji akumulatora * / HU Az akkumulátor gyártási ideje *
EN Buyer (name, company name), address * / DE Käufer (Name, Firma), Anschrift * / CS Kupující (jméno, název firmy), adresa * / SK Kupujúci (meno, názov firmy), adresa * / PL Nabywca (nazwisko, nazwa firmy), adres * / HU Vevő (név vagy cégnév), cím *
EN I confirm that I received the device fully functional and complete with instructions and proof of purchase from an official authorized dealer HECHT MOTORS and accept the terms of this warranty. DE Ich bestätige, dass ich das Gerät voll funktions-fähig und komplett mit Anweisungen und mit einem Kaufnachweis von einem offiziellen Vertragshändler HECHT MOTORS empfangen. Ich akzeptiere die Bedingungen dieser Garantie. CS Potvrzuji, že jsem zařízení obdržel plně funkční a kompletní, s návodem k použití a dokladem o koupi od oficiálního autorizovaného prodejce firmy HECHT MOTORS a akceptuji podmínky této záruky. SK Potvrdzujem, že som zariadenie dostal plne funkčné a kompletné, s návodom na použitie a dokladom o kúpe od oficiálneho autorizovaného predajcu firmy HECHT MOTORS a akceptujem podmienky tejto záruky. PL Oświadczam, że urządzenie odebrałem w pełni sprawne i kompletne wraz z Instrukcja obsługi oraz dowodem zakupu od oficjalnego autoryzowanego dystrybutora firmy HECHT MOTORS i akceptuje warunki niniejszej gwarancji. HU Igazolom, hogy a gépet működőképes állapotban és hiánytalanul, a használati útmutatóval együtt átvettem a HECHT MOTORS cég hivatalos forgalmazójától. A gép garanciális feltételeit elfogadom
EN* fills seller / DE * füllt Verkäufer / CS * vyplní prodejce / SK * vyplní predajca / PL * wypełnia sprzedawca / HU * az értékesítő tölti ki

EN Buyer´s signature / DE Unterschrift des Käufers / CS Podpis kupujícího / SK Podpis kupujúceho / PL Podpis nabywcy / HU Vevő aláírása	EN Stamp and signature * / DE Stempel und Unterschrift der Verkäufer * / CS Razítko a podpis prodejce * / SK Pečiatka a podpis predajcu * / PL Pieczątka i podpis sprzedawcy * / HU Értékesítő bélyegzője és aláírása *

CENTRAL SERVICE / CENTRÁLNÍ SERVIS / CENTRÁLNY SERVIS / SERWIS CENTRALNY / KÖZPONTI SZERVIZ

HECHT MOTORS s.r.o., U Mototechny 131, 251 62 Tehovec, Tel: +420 323 601 347, Fax: +420 323 661 348, www.hecht.cz, servis@hecht.cz • HECHT SK, spol. s r.o., Letisková 20, 971 01 Prievidza, Tel: +421 46 542 03 20, Fax: +421 46 542 72 07, www.hecht.sk, reklamacie@hecht.sk • HECHT Polska sp. z o.o., ul. Mickiewicza 54, 66-450 Bogdaniec, Tel: 48 957 117 140, Fax: 48 957 117 141, www.hechtpolska.pl, info@hechtpolska.pl • HECHT HUNGARY Kft., II. Rákoczi Ferenc út 323, 1214 Budapest, www.hecht.hu

www.hecht.cz

DG-1212016

Distribution and service / Vertrieb und Service / Distribuce a servis / Distribúcia a servis / Dystrybucja i serwis / Szervíz és forgalmazó

HECHT MOTORS s.r.o. • U Mototechny 131 • 251 62 Tehovec • www.hecht.cz
HECHT SK, spol. s r .o. • Letisková 20 • 971 01 Prievidza • www.hecht.sk
HECHT Polska Sp. z o.o. • Mickiewicza 54 • 66-450 Bogdaniec • www.hechtpolska.pl
HECHT HUNGARY Kft. • II. Rákoczi Ferenc út 323 • 1214 Budapest • www.hecht.hu
Hubertus Bäumer GmbH • Brock 7 • 48346 Ostbevern • www.hecht-garten.de

HECHT®
made for garden